ABBREVIATIONS

Ø	DIAMETER OR ROUND	KO	KNOCKOUT
&	AND		
		L	ANGLE
AB	ANCHOR BOLT	LAM	LAMINATE
ABV	ABOVE	LAV	LAVATORY
ACT	ACOUSTICAL CEILING TILE	LBL	LABEL
A/C	AIR CONDITIONED	LBS	POUNDS
AD	AREA DRAIN	L.P.	LOW POINT
ADJ	ADJUSTABLE	LT	LIGHT
AFF	ABOVE FINISHED FLOOR		
AGGR	AGGREGATE	MAX	MAXIMUM
ALUM	ALUMINUM	MB	MACHINE BOLT
ALT	ALTERNATIVE	MECH	MECHANICAL
ANCH	ANCHOR	MFR	MANUFACTURER
APPRO	APPROXIMATE	MIN	MINIMUM
ARCH	ARCHITECTURAL	MIR	MIRROR
ASPH	ASPHALT	MISC	MISCELLANEOUS
ATT	ATTACHMENT	MR	MOP RACK
AUTO	AUTOMATIC	MTD	MOUNTED
		MTL	METAL
BD	BOARD	MUL	MULLION
BITUM	BITUMINOUS	N	NORTH
BLDG	BUILDING	(N)	NEW
BLKG	BLOCKING	NIC	NOT IN CONTRACT
BM	BEAM	NO. OR #	NUMBER
B.O.	BOTTOM OF	NOM	NOMINAL
BOT	BOTTOM	NR	NON-RATED
BU	BUILT-UP	NTS	NOT TO SCALE
C	CHANNEL	O/	OVER
CAB	CABINET	OA	OVERALL
CB	CATCH BASIN	OC	ON CENTER
CC	CENTER TO CENTER	OD	OUTSIDE DIMENSION
CEM	CEMENT	OH	OVAL HEAD
CH	COAT HOOK	OPER	OPERABLE
CJT	CONTROL JOINT	OPNG	OPENING
CL	CENTERLINE	OPP	OPPOSITE
CLG	CEILING	OZ	OUNCE
CLR	CLEAR		
CNTR	COUNTER	PH	PAN HEAD
COL	COLUMN	PL	PLATE
COMB	COMBINATION	P/L	PROPERTY LINE
CONC	CONCRETE	PLAS	PLASTER
CONN	CONNECTION	PLUMB	PLUMBING
CONSTR	CONSTRUCTION	PLY	PLYWOOD
CONT	CONTINUOUS	PR	PAIR
CRPT	CARPET	PT	POINT
CT	CERAMIC TILE	PT	PRESSURE TREATED
CTR	CENTER	PTD	PAPER TOWEL DISPENSER
CTSK	COUNTERSUNK		
CW	COLD WATER	QTY	QUANTITY
DBL	DOUBLE	R	RISER
DEPT	DEPARTMENT	RAD	RADIUS
DF	DRINKING FOUNTAIN	RD	ROOF DRAIN
DIA	DIAMETER	REC	RECESSED
DIAG	DIAGONAL	REF	REFERENCE
DIM	DIMENSION	REFRIG	REFRIGERATOR
DISP	DISPOSAL	REQ	REQUIRED
DN	DOWN	RES	RESILIENT
DSA	DIVISION OF THE STATE ARCHITECT	RET	RETAINING
		RH	ROUND HEAD
DSP	DRY STANDPIPE	RM	ROOM
DTL	DETAIL	RND	ROUND
DW	DISHWASHER	RWL	RAINWATER LEADER
DWG	DRAWING		
		S	SOUTH
E	EAST	SAD	SEE ARCHITECTURAL DRAWINGS
(E)	EXISTING		
EA	EACH	SB	SPLASH BLOCK
EB	EXPANSION BOLT	SCD	SEE CIVIL DRAWINGS
EJ	EXPANSION JOINT	SCD	SEAT COVER DISPENSER
ELEC	ELECTRIC	SCHED	SCHEDULE
ELEV	ELEVATION	SCR	SHOWER CURTAIN ROD
EMER	EMERGENCY	SD	SOAP DISPENSER
EQ	EQUAL	SED	SEE ELECTRICAL DRAWINGS
EQUIPT	EQUIPMENT	SH	SHELF
EW	EACH WAY	SHT	SHEET
EXH	EXHAUST	SHTG	SHEATHING
EXP	EXPANSION	SIM	SIMILAR
EXT	EXTERIOR	SLD	SEE LANDSCAPE DRAWINGS
		SMD	SEE MECHANICAL DRAWINGS
FA	FIRE ALARM	SMS	SHEET METAL SCREW
FD	FLOOR DRAIN	SND	SANITARY NAPKIN DISPOSAL
FDN	FOUNDATION	SNV	SANITARY NAPKIN VENDOR
FEC	FIRE EXTINGUISHER CABINET	SPD	SEE PLUMBING DRAWINGS
FHC	FIRE HOSE CABINET	SPEC	SPECIFICATION
FHMS	FLAT HEAD METAL SCREW	SQ	SQUARE
FHWS	FLAT HEAD WOOD SCREW	SSD	SEE STRUCTURAL DRAWINGS
FIN	FINISH	SST	STAINLESS STEEL
FG	FINISH GRADE	ST	STREET
FIXT	FIXTURE	STD	STANDARD
FL	FLUSH	STL	STEEL
FLR	FLOOR (ING)	STRUC	STRUCTURAL
FLASH	FLASHING	SYM	SYMMETRICAL
FLUOR	FLUORESCENT		
F.O.	FACE OF		
FOC	FACE OF CONCRETE	T	TREAD
FOF	FACE OF FINISH	T	TEMPERED
FPRF	FIREPROOF	T&G	TONGUE AND GROOVE
FR	FIRE RESISTIVE	THK	THICKNESS
FS	FULL SIZE	THRESH	THRESHOLD
FSS	FOLDING SHOWER SEAT	T.O.	TOP OF
FT	FIRE TREATED	TOC	TOP OF CURB
FT	FOOT OR FEET	TOP	TOP OF PAVEMENT
FTG	FOOTING	TOS	TOP OF SLAB
FURR	FURRING	TOSTL	TOP OF STEEL
FUT	FUTURE	TOW	TOP OF WALL
FXD	FIXED	TPD	TOILET PAPER DISPENSER
		TYP	TYPICAL
G	GAS		
GA	GAUGE	UL	UNDERWRITERS LABORATORY
GALV	GALVANIZED		
GB	GRAB BAR	UON	UNLESS OTHERWISE NOTED
GFCI	GROUND FAULT CIRCUIT INTERRUPTER		
		VERT	VERTICAL
GL	GLASS	VIF	VERIFY IN FIELD
GSM	GALVANIZED SHEET METAL		
GYP	GYPSUM		
GWB	GYPSUM WALLBOARD	W	WEST
		W/	WITH
HB	HOSE BIBB	WC	WATER CLOSET
HDR	HEADER	WD	WOOD
HDWD	HARDWOOD	W	WIDE FLANGE
HDWR	HARDWARE	WH	WATER HEATER
HM	HOLLOW METAL	W/O	WITHOUT
HORIZ	HORIZONTAL	WSCT	WAINSCOT
H.P.	HIGH POINT	WR	WASTE RECEPTACLE
HR	HOUR	WT	WEIGHT
HSS	HOLLOW STRUCTURAL SECTION		
		Z	ZEE SECTION
HT	HEIGHT		
HW	HOT WATER		
ID	INSIDE DIAMETER		
INFO	INFORMATION		
INSUL	INSULATION		
INT	INTERIOR		
JAN	JANITOR		
JT	JOINT		

GENERAL NOTES

1. THE CONTRACT DOCUMENTS INCLUDE THESE DRAWINGS AND THE SPECIFICATIONS.

2. ALL WORK SHALL SHALL BE PERFORMED IN ACCORDANCE WITH AIA DOCUMENT A201 "GENERAL CONDITIONS OF THE CONTRACT FOR CONSTRUCTION". IN THESE CONTRACT DOCUMENTS, THE TERM 'CONTRACTOR' SHALL APPLY TO THAT PERSON EMPLOYED BY THE OWNER TO TO TAKE CHARGE OF AND PERFORM THIS WORK.

3. ALL WORK AND MATERIALS SHALL BE IN ACCORDANCE WITH APPLICABLE CITY AND COUNTY CODES AND WITH THE LATEST RULES AND REGULATIONS OF THE STATE FIRE MARSHALL, TITLE 24 OF THE CALIFORNIA ADMINISTRATIVE CODE, OCCUPATIONAL HEALTH AND SAFETY ADMINISTRATION REGULATIONS, N.F.P.A. (LIFE SAFETY CODE) AND OTHER APPLICABLE STATE LAWS AND REGULATIONS. NOTHING IN THE CONTRACT DOCUMENTS IS TO BE CONSTRUED TO PERMIT WORK NOT CONFORMING TO THESE CODES. WHERE CONFLICT OCCURS, THE DIRECTIVES SHALL GOVERN, EXCEPT WHERE SUPERIOR WORK IS SPECIFIED OR INDICATED. SUCH CONFLICTS SHALL BE BROUGHT TO THE ARCHITECT'S ATTENTION FOR CLARIFICATION, PRIOR PROCEEDING WITH THE WORK.

4. ALL ITEMS INDICATED ARE NEW WORK UNLESS NOTED AS EXISTING.

5. VERIFY ALL EXISTING CONDITIONS AND PROPOSED DIMENSIONS AT JOB SITE. EXISTING DIMENSIONS GIVEN ARE TAKEN FROM INFORMATION PROVIDED BY THE OWNER'S SURVEY. REVIEW ALL DRAWINGS AND DIMENSIONS BEFORE COMMENCING WORK AND NOTIFY ARCHITECT OF ANY DISCREPANCIES. DO NOT PROCEED WITH WORK UNTIL DISCREPANCIES ARE RESOLVED. DO NOT SCALE DRAWINGS

6. DIMENSIONS GIVEN AS NOMINAL ARE FOR REFERENCE ONLY. ACTUAL DIMENSIONS MUST BE VERIFIED THROUGH FIELD LAYOUT.

7. ALL PLAN DIMENSIONS GIVEN TO FACE OF FINISH AND CENTERLINE OF WINDOWS UNLESS OTHERWISE NOTED. VERTICAL DIMENSIONS GIVEN TO TOP OF SLAB AND TOP OF PLYWOOD FLOOR OR ROOF SHEATHING UNLESS OTHERWISE NOTED.

8. ALL DOORS ARE DIMENSIONED FROM ADJACENT WALL TO HINGE SIDE OF FRAME ACCORDING TO TYPICAL DOOR FRAME DETAIL, UNLESS OTHERWISE NOTED.
x
9. SEE DOOR AND WINDOW SCHEDULES FOR UNIT DIMENSIONS.

10. ALL TYPICAL DETAILS SHALL BE USED WHERE APPLICABLE UNLESS NOTED OTHERWISE. ALL DETAILS SHALL BE CONSIDERED TYPICAL AT SIMILAR CONDITIONS.

11. AT ALL TIMES, THE CONTRACTOR SHALL BE SOLELY AND COMPLETELY RESPONSIBLE FOR THE CONDITIONS OF THE JOB SITE INCLUDING SAFETY OF THE PERSONS AND PROPERTY. THE ARCHITECT'S JOBSITE REVIEW IS NOT INTENDED TO INCLUDE REVIEW OF THE ADEQUACY OF THE CONTRACTOR'S SAFETY MEASURES.

12. PERFORM ALL WORK IN AN ORDERLY MANNER WITHOUT DAMAGE TO OTHER PARTS OF THE BUILDING OR ADJACENT PROPERTIES. ANY RESULTING DAMAGE OR LOSS SHALL BE REPAIRED OR CORRECTED BY THE CONTRACTOR AT NO EXPENSE TO THE OWNER.

13. MAINTAIN WORK AREAS CLEAN AND FREE FROM DEBRIS AT ALL TIMES. REMOVE SURPLUS MATERIALS AND WASTE AS THE WORK PROGRESSES.

14. AT THE END OF EACH WORK DAY THE CONTRACTOR SHALL BARRICADE THE WORK AREA TO PREVENT ACCESS BY UNAUTHORIZED PERSONS.

DEMOLITION GENERAL NOTES

1. THE DEMOLITION PLAN SHOWS MAJOR BUILDING ELEMENTS TO BE DEMOLISHED. ADDITIONAL DEMOLITION WORK IS REQUIRED TO INSTALL PARTS OF THE WORK. REVIEW THE FINISH SCHEDULE, DETAILS, MECHANICAL, ELECTRICAL, PLUMBING, STRUCTURAL AND OTHER DOCUMENTS AND PROVIDE DEMOLITION, CUTTING AND PATCHING REQUIRED TO PERFORM THE WORK.

2. PROVIDE LABOR AND EQUIPMENT FOR ALL DEMOLITION AND RELATED WORK. DEMOLISH AND REMOVE FROM THE PREMISES ALL PARTS OF THE EXISTING BUILDING INDICATED FOR DEMOLITION OR REQUIRED TO BE DEMOLISHED FOR THE INSTALLATION OF NEW WORK.

3. NOTES INDICATE EXISTING ELEMENTS TO BE DEMOLISHED, WHICH IS TO INCLUDE THE ENTIRE SYSTEM RELATED TO THE ELEMENT, INCLUDING MISCELLANEOUS FASTENERS, SUBSTRATES, AND OTHER MISCELLANEOUS ITEMS THAT ARE PART OF THE ELEMENT INDICATED.

4. DEMOLITION DRAWINGS SHOW MAJOR ELEMENTS OF WORK TO BE DEMOLISHED. DUE TO THE COMPLEXITY OF CONSTRUCTION, ALL WORK TO BE DEMOLISHED IS NOT SHOWN. CAREFULLY REVIEW DRAWINGS SHOWING WORK TO BE INSTALLED AND PROVIDE DEMOLITION OF EXISTING ELEMENTS AND ALL CUTTING AND PATCHING REQUIRED TO ACCOMMODATE THE NEW WORK.

5. DEBRIS RESULTING FROM THE DEMOLITION WORK SHALL BECOME THE PROPERTY OF THE CONTRACTOR AND SHALL BE REMOVED AND DISPOSED OF IN A LEGAL MANNER OFF OF THE OWNERS PROPERTY. LOCATION OF DISPOSAL SITE AND LENGTH OF HAUL SHALL BE THE CONTRACTOR'S RESPONSIBILITY.

6. REVIEW THE PROJECT DOCUMENTS AND INSPECT THE PREMISES PRIOR TO BEGINNING WORK TO ASCERTAIN ANY CIRCUMSTANCES THAT MAY ADVERSELY AFFECT DEMOLITION WORK. BRING ANY SUCH CIRCUMSTANCES TO THE ATTENTION OF THE ARCHITECT PRIOR TO PROCEEDING WITH THE WORK.

7. PROVIDE ALL SHORING NECESSARY TO STABILIZE THE STRUCTURE BEFORE PERFORMING ANY DEMOLITION. DETERMINATION OF SHORING REQUIREMENTS AND PROVIDING SHORING SHALL BE SOLELY THE RESPONSIBILITY OF THE CONTRACTOR. IF REQUIRED, THE CONTRACTOR SHALL RETAIN THE SERVICES OF A PROFESSIONAL ENGINEER TO DESIGN AND VERIFY THE ADEQUACY OF SHORING PROVIDED.

8. PROTECT EXISTING FINISHES AND WORK TO REMAIN FROM DAMAGE.

9. REFER TO STRUCTURAL DRAWINGS. CUT AND PATCH OR PROVIDE DEMOLITION AS REQUIRED TO PERFORM STRUCTURAL WORK INDICATED.

10. REFER TO FINISH SCHEDULE FOR NEW FINISHES. DEMOLISH EXISTING FINISHES DOWN TO WALL OR FLOOR FRAMING WHERE INDICATED TO RECEIVE NEW FINISH, UNLESS NEW FINISH IS INDICATED AS AN OVERLAY OF THE EXISTING FINISH.

11. ALL AREAS WHERE FINISH MATERIALS ARE TO BE REMOVED SHALL BE STRIPPED, CLEANED AND PREPARED TO RECEIVE FUTURE FINISH AS INDICATED ON THE FINISH SCHEDULE.

GOVERNING CODES

LIST OF APPLICABLE CODES - CALIFORNIA CODE OF REGULATIONS

2.1 2019 CALIFORNIA BUILDING STANDARDS ADMINISTRATIVE CODE, PART 1 TITLE 24 C.C.R.
2.2 2019 CALIFORNIA BUILDING CODE (CBC) PART 2, VOL 1-2, TITLE 24 C.C.R.
2.3 2019 CALIFORNIA ELECTRICAL CODE (CEC) PART 3 TITLE 24 C.C.R.
2.4 2019 CALIFORNIA MECHANICAL CODE (CMC) PART 4, TITLE 24 C.C.R
2.5 2019 CALIFORNIA PLUMBING CODE (CPC) PART 5, TITLE 24 C.C.R
2.6 2019 CALIFORNIA ENERGY CODE (CENC) PART 6,TITLE 24 C.C.R.
2.7 2019 CALIFORNIA FIRE CODE (CFC) PART 9, TITLE 24 C.C.R.
2.8 CALIFORNIA EXISTING BUILDING CODE, PART 10, TITLE 24 C.C.R.
2.9 2019 CALIFORNIA REFERENCED STANDARDS, PART 12, TITLE 24 C.C.R.
2.10 TITLE 19 C.C.R. PUBLIC SAFETY, STATE FIRE MARSHAL REGULATIONS

1

PROJECT DATA

HIGHLANDS RECREATION DISTRICT STAIR & DECK REPAIR

BUILDING INFORMATION

	EXISTING	PROPOSED
NO. FLOORS	2 FLR	NC
USABLE FLOOR AREA	7303 SF	NC
1ST FLOOR	6267 SF	NC
2ND FLOOR	1036 SF	NC
TOTAL:	7303 SF	

OCCUPANCY B
CONSTRUCTION TYPE V-B

ALLOWABLE BUILDING AREA

OCCUPANT LOAD FACTOR - BUSINESS AREAS: 150 GROSS SF / OCCUPANT

OCCUPANTS EGRESSING EXIT STAIR AND BALCONY: 741 GSF / 150 GROSS SF / OCCUPANT = 5 OCCUPANTS

1

PROJECT DESCRIPTION

REPAIR OF DAMAGED (E) STAIR AND FRAMING AT EXTERIOR EXIT BALCONY.

OWNER

HIGHLANDS RECREATION DISTRICT
1851 LEXINGTON AVENUE
SAN MATEO, CA. 94402

SITE INFORMATION

APN	041-132-010
WIDTH	307.57 FT
DEPTH	549 FT
SITE AREA	3.447 ACRES
ZONING	R1/S8
(E) USE	RECREATION OFFICES
PROPOSED USE	NO CHANGE

SHEET INDEX

ARCHITECTURAL DRAWINGS

A0.1 DRAWING INDEX, PROJECT INFO & VICINITY MAP
A1.0 SITE PLAN
A2.0 FLOOR PLANS
A3.1 EXTERIOR ELEVATIONS
A7.1 MISCELLANEOUS DETAILS
A7.2 MISCELLANEOUS DETAILS

STRUCTURAL DRAWINGS

S1.0 STRUCTURAL NOTES & DETAILS
S2.1 FOUNDATION & FRAMING PLANS
S3.0 STRUCTURAL DETAILS

RESUBMITTAL

11/21/2022

SAN MATEO COUNTY
BUILDING INSPECTION

APPROVED PLANNING

Dec 12, 2022

BY: cleung
San Mateo County

Approved by Planning for replacement (same size and location)

EROSION & SEDIMENT CONTROL REQUIRED
Project erosion and sediment control measures shall be maintained as necessary throughout the duration of the permit to be effective. If significant field changes are made, revised plans must be submitted for approval. The building inspector has the authority to require additional measures at any time and may cancel any requested inspection if any measures are found to be deficient. A Stop Work Notice may be issued pursuant to the County's Stormwater Enforcement Response Plan until corrections have been made and applicable fees paid for staff enforcement time. The property owner shall demonstrate via building inspection that the site is stabilized, either with adequate erosion control or landscaping, prior to issuance of the Certificate of Occupancy.

JOB COPY TO REMAIN ON SITE AT ALL TIMES

REVIEWED FOR CODE COMPLIANCE
This review does not authorize violation of State or County building laws.

Jan 26 2023

SAN MATEO CO. BLDG. INSP. DIV.

HIGHLANDS RECREATION DISTRICT

STAIR AND DECK REPAIR
1851 LEXINGTON AVE
SAN MATEO, CA 94402

HIGHLANDS RECREATION DISTRICT

1851 LEXINGTON AVE
SAN MATEO, CA 94402

HAMILTON + AITKEN ARCHITECTS
525 BRANNAN STREET STE 400
SAN FRANCISCO, CA 94107
T: 415 974 5030
www.HAarchs.com

LICENSED ARCHITECT
CHAD HAMILTON
C15932
Ren.12/30/23
STATE OF CALIFORNIA

NO.	ISSUED FOR	DATE
A	DBI REVIEW	4/11/22
B	DBI REVIEW	11/4/22

THE DRAWING, DESIGN AND INFORMATION CONTAINED ON THIS SHEET ARE PREPARED FOR USE ON THIS PROJECT AS INSTRUMENTS OF SERVICE, AND REMAIN THE PROPERTY OF HAMILTON+AITKEN ARCHITECTS, WHICH RETAINS ALL COMMON LAW, STATUTORY AND RESERVED RIGHTS, INCLUDING COPYRIGHT. © HAMILTON+AITKEN ARCHITECTS.

LEGEND

COLUMN LINES

ELEVATION — SHEET ON WHICH ELEVATION OCCURS

SECTION — SHEET ON WHICH SECTION OCCURS

DETAIL REFERENCE — SHEET ON WHICH DETAIL OCCURS

MATCH LINE

VESTIBULE

AREA IDENTITY/ PLAN
VESTIBULE = ROOM NAME
A104 = AREA IDENTITY
A = BUILDING AREA OR IDENTITY
104 = ROOM NUMBER

3/A5.1= INTERIOR ELEVATION DESIGNATION AND DRAWING NUMBER WHERE ELEVATION IS SHOWN

A,B,C, OR D = ELEVATION IDENTITY

INTERIOR ELEVATION — SHEET ON WHICH ELEVATION OCCURS

DIMENSION OR WORK POINT

REVISION DESIGNATION

SPOT ELEVATION IN FEET
G = GRADE, I = INVERT

WALL TYPE IDENTIFICATION

CASEWORK TYPE - SEE CASEWORK SCHEDULE

DOOR NUMBER - MULTIPLE DOOR DESIGNATION CORRESPONDS TO ROOM #

WINDOW SCHEDULE REFERENCE

CEILING HEIGHT - ABOVE FINISH FLOOR

KEYNOTE REFERENCE — C.S.I. DIVISION NUMBER.

VICINITY MAP

1851 LEXINGTON AVENUE, SAN MATEO, CA.

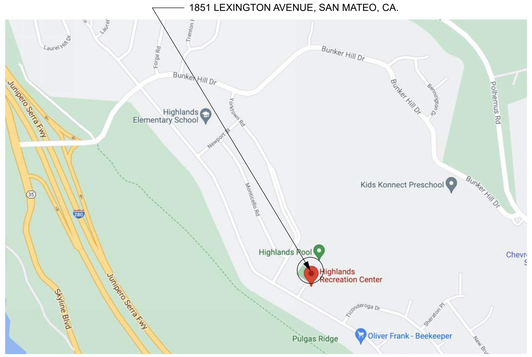

REGULATORY APPROVALS

DRAWING TITLE

DRAWING INDEX, PROJECT INFO & VICINITY MAP

SHEET NUMBER

A0.1

CAD FILE: 21160 TTL.vwx

DATE	PROJECT NO.
4/28/2021	2021.160

FOR REVIEW - NOT FOR CONSTRUCTION

COUNTY OF SAN MATEO

B. Specific Exceptions. Do not use this portion if part A has been completed.
This part is generally used for remodels exceeding the threshold amount and where Title 24 provides an exemption from specific accessibility features.

Exceptions Requested	Code Section/Exception	Cost of Making Features Accessible *Attach Documentation*
	Total	$

Description:

The cost of all construction contemplated is $:
The access feature increases the cost of construction by *percentage of construction cost*:
The impact on financial feasibility of the project, if the requested exemption is not approved is:
The facility is used by the general public for the purpose of:

The following individuals provided information listed above:

Architect/Designer	Owner/Tenant
Chad Hamilton AIA – Hamilton + Aitken Architects	
Address 525 Brannan Street Ste 400 San Francisco, CA 94107	Address
Signature *Required* Date 11/3/2022	Signature *Required* Date

For County Use Only

Date Received: Received by:

Findings and decisions of the Enforcing Official:

Findings

- ❑ General Unreasonable Hardship Exception request is approved based on Section 11B-202.4 of the California Building Code. Access features listed in part A of this form shall be provided as part of this permit.
- ❑ Specific Exception(s) request is approved based on Section(s) _____. All other access features shall be provided as specified in the California Building Code.
- ❑ Ratification required. This decision must be ratified by the Board of Building Appeals and Advisors. An application must be completed and a filing fee paid before the board can hear the request.
- ❑ Request denied. If you disagree with this determination, you may seek an appeal through the Board of Building Appeals and Advisors. An application must be completed and a filing fee paid before the board can hear the request.

Name of Enforcing Official *Please Print* | Signature of Enforcing Official | Date

FRM00157_BLD.DOCX (7/27/15)

COUNTY OF SAN MATEO

Application for Unreasonable Hardship
Exception to Disabled Access Requirements

Please print legibly or type.

Project Address: 1851 Lexington Ave, San Mateo 94402	Plan Check Number: BLD2022-00938
Owner: Highlands Recreation District	Telephone (*Include Area Code*): (650)341-4251
Applicant: Chad Hamilton AIA	Telephone (*Include Area Code*): (415) 260 0447

It is requested that the above-named project be granted an exception from the accessibility requirements of the 2013 California Building Code, as noted specifically below.

A. Section 11B-202.4 General Exemption. Applicable to existing buildings where the construction cost at this tenant space over the last three years does not exceed the valuation threshold amount. The specific accessibility features that create a hardship may be exempted, but not all accessibility features. The area of alteration itself may not be exempted.

Valuation threshold amount: $172,418 (as of January 2021)

Access Feature	Does this feature meet the latest edition of Title 24?	If not, is this feature going to be made accessible as part of this permit?	If so, cost of making feature accessible *Attach documentation*
1. Path of travel to entrance	Yes		$
2. Entrance	No	Yes - move door	$ 3,000
3. Path of travel within building/ facility to area of remodel	No	Yes - treads, railings & clearances	$ 18,500
4. Elevator	No	No	$
5. Sanitary Facilities	Yes		$
6. Public Phones *if provided*	NA		$
7. H_2O fountains *if provided*	Yes		$
8. Other (*Parking, signs*)	Yes		$

Total cost of access features provided (A) $ 21,500
Total cost of construction of this project and all other work performed over the last three (3) years in this tenant space (B) $ 86,000
*Percentage of the total cost of project (20% minimum): (A/B) x 100% % 25

Description of access features to be provided: Move (E) door to provide strike side clearance; stair treads to compliant size, rise/run and safe condition; compliant handrail, clearance at stair landings

Alterations performed over the last three years in this tenant space. Include in total valuation B above unless 20% of valuation of individual remodel has already been expended on access features (provide documentation).

Permit Number	Date	Description	Valuation
NA			

1

KEYNOTES

RESUBMITTAL
11/21/2022
SAN MATEO COUNTY
BUILDING INSPECTION

JOB COPY
TO REMAIN ON
SITE AT ALL TIMES

REVIEWED FOR CODE COMPLIANCE
This review does not authorize violation of State or County building laws.
Jan 26 2023
SAN MATEO CO. BLDG. INSP. DIV.

LEGEND

HIGHLANDS RECREATION DISTRICT

STAIR AND DECK REPAIR
1851 LEXINGTON AVE
SAN MATEO, CA 94402

HIGHLANDS RECREATION DISTRICT

1851 LEXINGTON AVE
SAN MATEO, CA 94402

HAMILTON + AITKEN ARCHITECTS
525 BRANNAN STREET STE 400
SAN FRANCISCO, CA 94107
T: 415 974 5030
www.HAarchs.com

LICENSED ARCHITECT
CHAD HAMILTON
C15932
Ren.12/30/23
STATE OF CALIFORNIA

NO.	ISSUED FOR	DATE
A	DBI REVIEW	4/11/22
B	DBI REVIEW	11/4/22

THE DRAWING, DESIGN AND INFORMATION CONTAINED ON THIS SHEET ARE PREPARED FOR USE ON THIS PROJECT AS INSTRUMENTS OF SERVICE, AND REMAIN THE PROPERTY OF HAMILTON+AITKEN ARCHITECTS, WHICH RETAINS ALL COMMON LAW, STATUTORY AND RESERVED RIGHTS, INCLUDING COPYRIGHT. © HAMILTON+AITKEN ARCHITECTS.

DRAWING TITLE
ACCESS HARDSHIP FORM

SHEET NUMBER
A0.2

CAD FILE: 21160 TTL.vwx

DATE	PROJECT NO.
4/28/2021	2021.160

FOR REVIEW - NOT FOR CONSTRUCTION

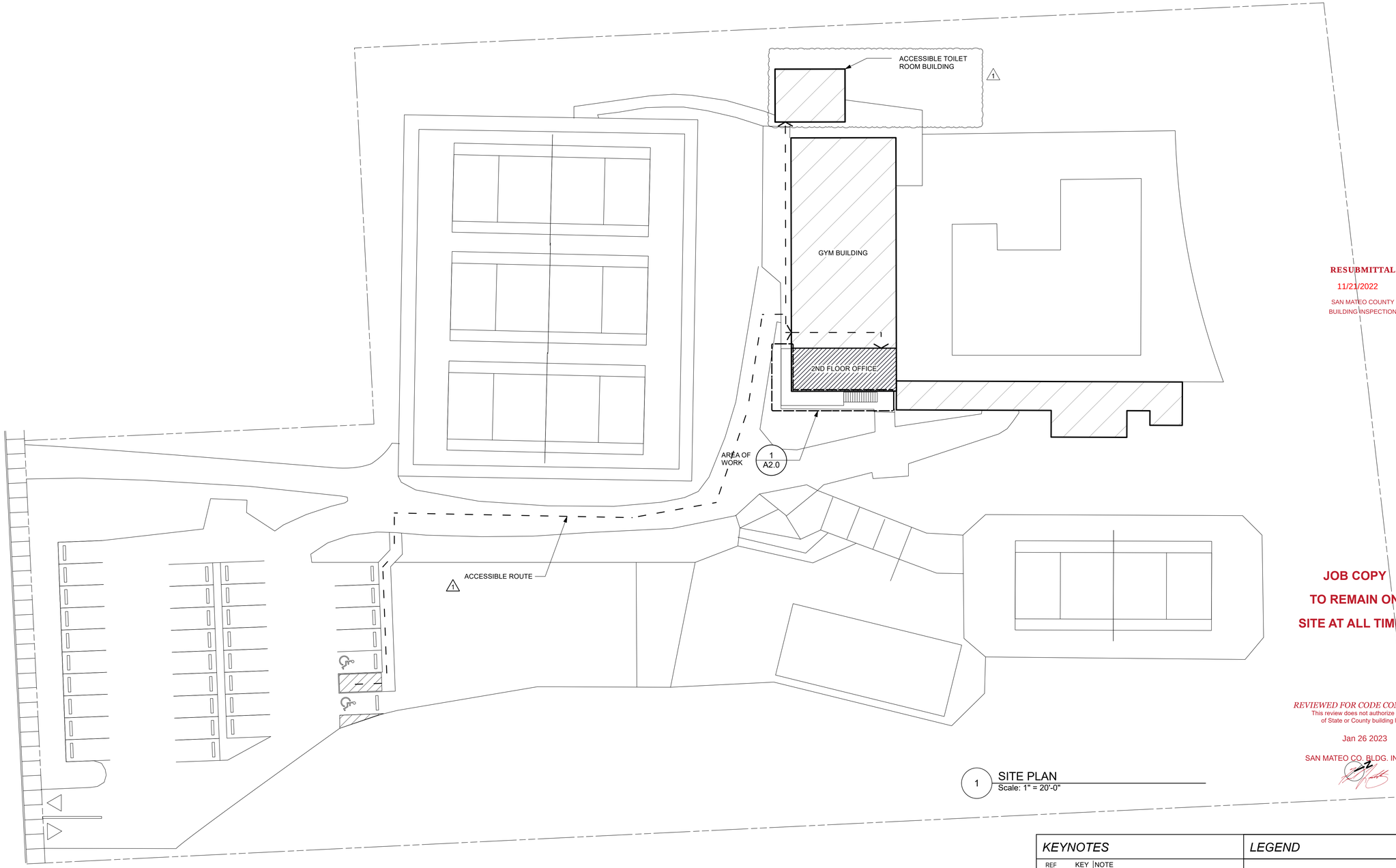

1 SITE PLAN
Scale: 1" = 20'-0"

RESUBMITTAL
11/21/2022
SAN MATEO COUNTY
BUILDING INSPECTION

JOB COPY
TO REMAIN ON
SITE AT ALL TIMES

REVIEWED FOR CODE COMPLIANCE
This review does not authorize violation
of State or County building laws
Jan 26 2023
SAN MATEO CO. BLDG. INSP. DIV.

ACCESSIBLE PARKING SCHEDULE

NO.	DESCRIPTION	TOTAL PARKING SPACES	TOTAL ACCESSIBLE PARKING SPACES REQUIRED	ACCESSIBLE PARKING SPACES PROVIDED	VAN ACCESSIBLE SPACES REQUIRED	VAN ACCESSIBLE SPACES PROVIDED
1	VISITORS AND STAFF	33	2	2	1	1

KEYNOTES

REF	KEY	NOTE

LEGEND

HIGHLANDS RECREATION DISTRICT

STAIR AND DECK REPAIR
1851 LEXINGTON AVE
SAN MATEO, CA 94402

HIGHLANDS RECREATION DISTRICT

1851 LEXINGTON AVE
SAN MATEO, CA 94402

HAMILTON + AITKEN ARCHITECTS
525 BRANNAN STREET STE 400
SAN FRANCISCO, CA 94107
T: 415 974 5030
www.HAarchs.com

LICENSED ARCHITECT
CHAD HAMILTON
C15932
Ren.12/30/23
STATE OF CALIFORNIA

NO.	ISSUED FOR	DATE
A	DBI REVIEW	4/11/22
B	DBI REVIEW	11/4/22

THE DRAWING, DESIGN AND INFORMATION CONTAINED ON THIS SHEET ARE PREPARED FOR USE ON THIS PROJECT AS INSTRUMENTS OF SERVICE, AND REMAIN THE PROPERTY OF HAMILTON+AITKEN ARCHITECTS, WHICH RETAINS ALL COMMON LAW, STATUTORY AND RESERVED RIGHTS, INCLUDING COPYRIGHT. © HAMILTON+AITKEN ARCHITECTS.

DRAWING TITLE
SITE PLAN

SHEET NUMBER
A1.0

CAD FILE: 21160 TTL.vwx

DATE 4/28/2021
PROJECT NO. 2021.160

FOR REVIEW - NOT FOR CONSTRUCTION

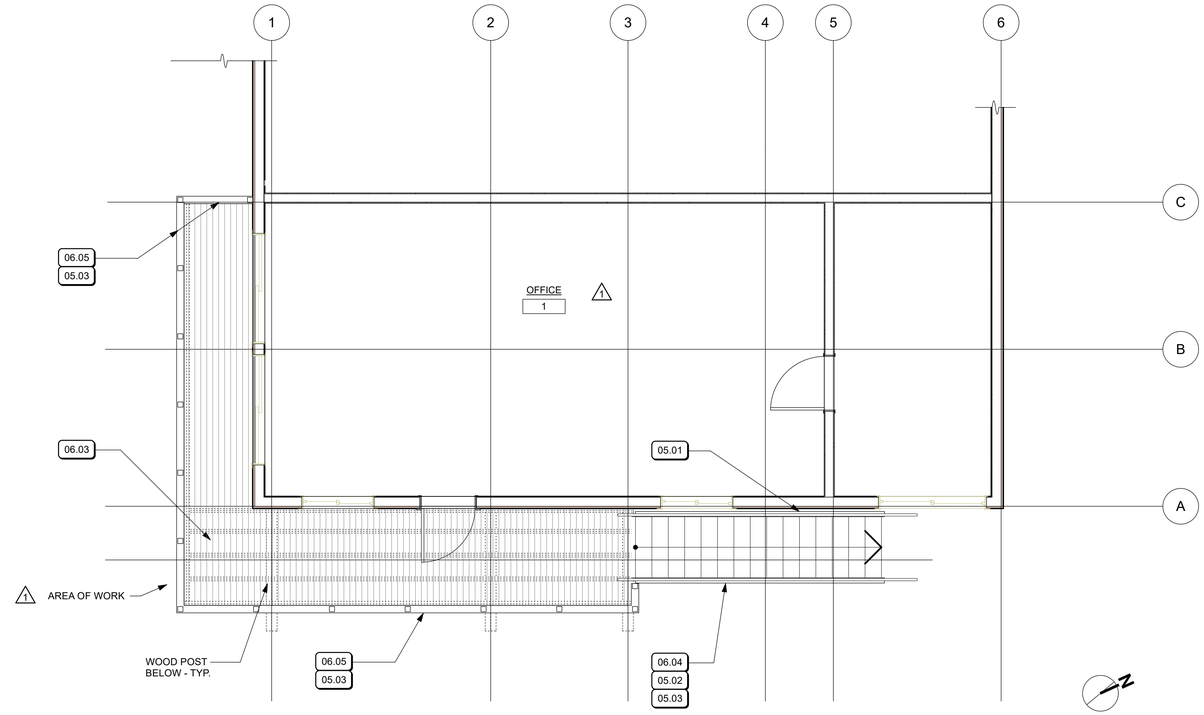

1 2ND FLOOR PLAN
Scale: 1/4" = 1'-0"

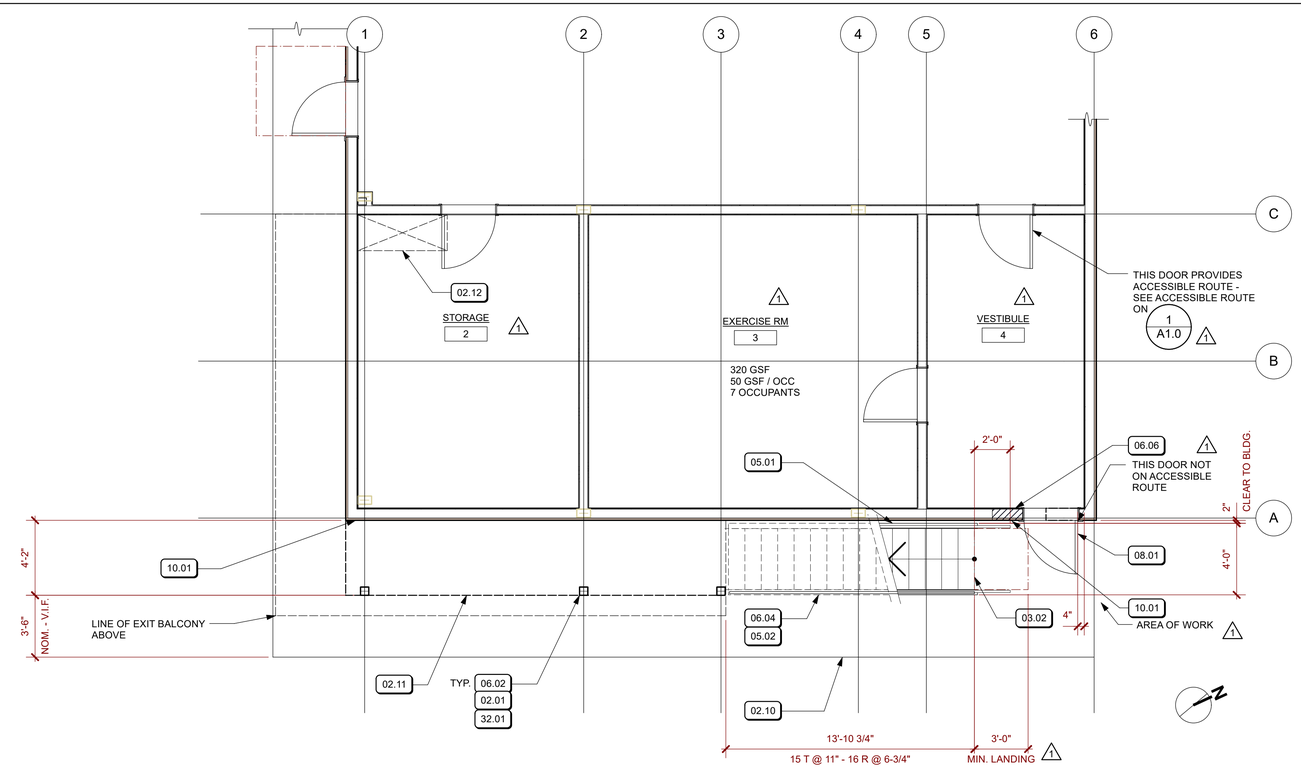

2 1ST FLOOR PLAN
Scale: 1/4" = 1'-0"

KEYNOTES

REF	KEY	NOTE
	02.01	SAWCUT AND DEMO PART OF (E) CONCRETE PAVING FOR (N) CONCRETE FOOTING - CUT OUT CONCRETE PAVING ALONG (E) JOINT LINES
	02.10	(E) CONCRETE PAVING
	02.11	DEMO (E) PLYWOOD STORAGE CABINETS
	02.12	DEMO PART OF (E) GYPSUM WALLBOARD CEILING TO INSTALL (N) BEAM - PATCH BACK
2/A7.2, 11/S1.0	03.02	CONCRETE STAIR FOOTING AND FIRST TREAD WITH CONTRASTING STRIPE NOSING AT EACH TREAD - S.S.D. FOR ADDITIONAL INFO
1/A7.2	05.01	CONTINUOUS WALL MOUNTED HANDRAIL
10/A7.1	05.02	CONTINUOUS METAL PIPE HANDRAIL MOUNTED TO GUARDRAIL POSTS
	05.03	INSTALL SALVAGED GUARDRAIL SCREEN IN (N) GUARDRAIL AND POST ASSEMBLY
	06.02	WOOD POST - S.S.D.
9/S1.0	06.03	CONTINUOUS 2X4 CEDAR DECKING - 1/8" SPACE BETWEEN PLANKS - INSTALL OVER SELF-ADHESIVE FLEXIBLE FLASHING
2/A7.2	06.04	WOOD STAIR WITH CONTRASTING STRIPE NOSING AT EACH TREAD - S.S.D. FOR ADDITIONAL INFO
9/A7.1	06.05	WOOD GUARDRAIL AND GUARDRAIL POSTS
	06.06	INFILL 1X CEDAR BOARD AND SIDING FROM SILL TO BOTTOM LINE ABOVE
	08.01	SALVAGE (E) DOOR AND FRAME - REINSTALL DOOR AND FRAME IN (N) LOCATION SHOWN - CUT AND PATCH PART OF (E) SIDING TO INSTALL DOOR
5/A7.2	10.01	ACCESSIBLE ROUTE TO ENTRY SIGN
	32.01	PATCH CONCRETE PAVING - FINISH TO MATCH (E) CONCRETE PAVING

RESUBMITTAL
11/01/2022

SHEET NOTES

1. ALL EXTERIOR EXPOSED LUMBER DECAY RESISTANT SPECIES OR PRESSURE TREATED.
2. GALVANIZE ALL EXTERIOR STEEL U.O.N.
3. ALL EXTERIOR FASTENERS SHALL BE CORROSION RESISTANT. WOOD SCREWS #12 AND SMALLER STAINLESS STEEL U.O.N. BOLTS, SDS SCREWS AND LAG SCREWS LARGER THAN #12 SHALL BE HOT DIP GALVANIZED U.O.N.
4. SEE STRUCTURAL DRAWINGS FOR ADDITIONAL INFORMATION.

JOB COPY
TO REMAIN ON
SITE AT ALL TIMES

REVIEWED FOR CODE COMPLIANCE
This review does not authorize violation
of State or County building laws.
Jan 26 2023
SAN MATEO CO. BLDG. INSP. DIV.

LEGEND

HIGHLANDS RECREATION DISTRICT

STAIR AND DECK REPAIR
1851 LEXINGTON AVE
SAN MATEO, CA 94402

HIGHLANDS RECREATION DISTRICT

1851 LEXINGTON AVE
SAN MATEO, CA 94402

HAMILTON + AITKEN ARCHITECTS
525 BRANNAN STREET STE 400
SAN FRANCISCO, CA 94107
T: 415 974 5030
www.HAarchs.com

LICENSED ARCHITECT
CHAD HAMILTON
C15932
Ren.12/30/23
STATE OF CALIFORNIA

NO.	ISSUED FOR	DATE
A	DBI REVIEW	4/11/22
B	DBI REVIEW	11/4/22

THE DRAWING, DESIGN AND INFORMATION CONTAINED ON THIS SHEET ARE PREPARED FOR USE ON THIS PROJECT AS INSTRUMENTS OF SERVICE, AND REMAIN THE PROPERTY OF HAMILTON+AITKEN ARCHITECTS, WHICH RETAINS ALL COMMON LAW, STATUTORY AND RESERVED RIGHTS, INCLUDING COPYRIGHT. © HAMILTON+AITKEN ARCHITECTS.

DRAWING TITLE
FLOOR PLAN

SHEET NUMBER
A2.0

CAD FILE: 21160 TTL.vwx

DATE	PROJECT NO.
4/28/2021	2021.160

FOR REVIEW - NOT FOR CONSTRUCTION

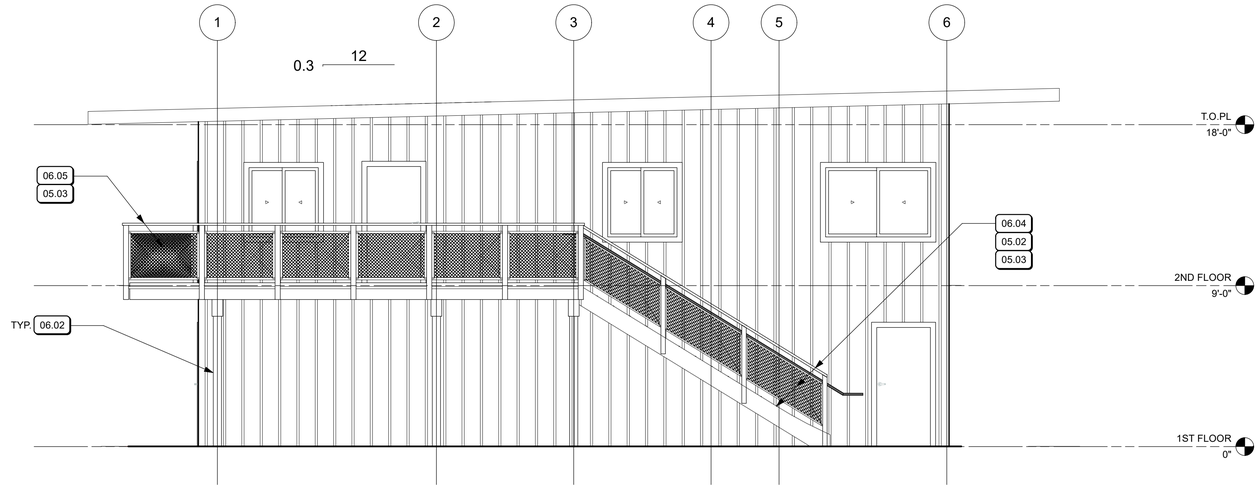

1 SOUTH ELEVATION
Scale: 1/4" = 1'-0"

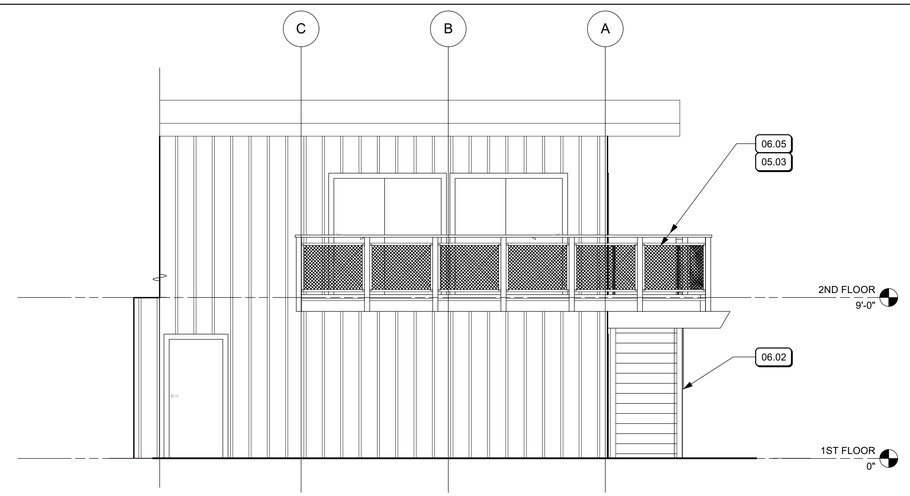

2 WEST ELEVATION
Scale: 1/4" = 1'-0"

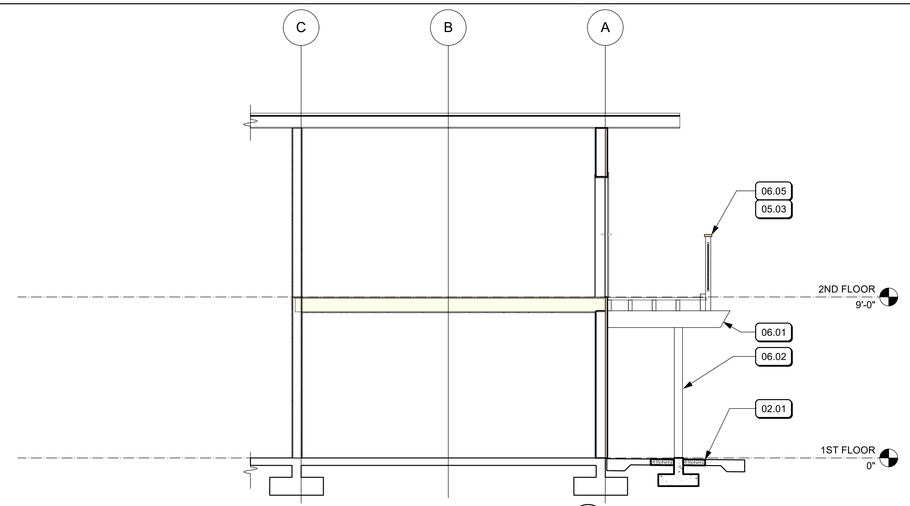

3 BUILDING SECTION
Scale: 1/4" = 1'-0"

KEYNOTES

REF	KEY	NOTE
	02.01	SAWCUT AND DEMO PART OF (E) CONCRETE PAVING FOR (N) CONCRETE FOOTING - CUT OUT CONCRETE PAVING ALONG (E) JOINT LINES
10/A7.1	05.02	CONTINUOUS METAL PIPE HANDRAIL MOUNTED TO GUARDRAIL POSTS
	05.03	INSTALL SALVAGED GUARDRAIL SCREEN IN (N) GUARDRAIL AND POST ASSEMBLY
	06.01	CUT AND DEMO (E) 6X8 WOOD BEAM WITH 2X SPLICE PLATES EACH SIDE - INSTALL (N) BEAM B5
	06.02	WOOD POST - S.S.D.
2/A7.2	06.04	WOOD STAIR WITH CONTRASTING STRIPE NOSING AT EACH TREAD - S.S.D. FOR ADDITIONAL INFO
9/A7.1	06.05	WOOD GUARDRAIL AND GUARDRAIL POSTS

RESUBMITTAL

11/21/2022

SAN MATEO COUNTY
BUILDING INSPECTION

SHEET NOTES

1. ALL EXTERIOR EXPOSED LUMBER DECAY RESISTANT SPECIES OR PRESSURE TREATED.
2. GALVANIZE ALL EXTERIOR STEEL U.O.N.
3. ALL EXTERIOR FASTENERS SHALL BE CORROSION RESISTANT. WOOD SCREWS #12 AND SMALLER STAINLESS STEEL U.O.N. BOLTS, SDS SCREWS AND LAG SCREWS LARGER THAN #12 HOT DIP GALVANIZED U.O.N.
4. SEE STRUCTURAL DRAWINGS FOR ADDITIONAL INFORMATION.

JOB COPY
TO REMAIN ON
SITE AT ALL TIMES

REVIEWED FOR CODE COMPLIANCE
This review does not authorize violation
of State or County building laws.

Jan 26 2023

SAN MATEO CO. BLDG. INSP. DIV.

LEGEND

HIGHLANDS RECREATION DISTRICT

STAIR AND DECK REPAIR
1851 LEXINGTON AVE
SAN MATEO, CA 94402

HIGHLANDS RECREATION DISTRICT

1851 LEXINGTON AVE
SAN MATEO, CA 94402

HAMILTON + AITKEN ARCHITECTS
525 BRANNAN STREET STE 400
SAN FRANCISCO, CA 94107
T: 415 974 5030
www.HAarchs.com

LICENSED ARCHITECT
CHAD HAMILTON
C15932
Ren.12/30/23
STATE OF CALIFORNIA

NO.	ISSUED FOR	DATE
A	DBI REVIEW	4/11/22
B	DBI REVIEW	11/4/22

THE DRAWING, DESIGN AND INFORMATION CONTAINED ON THIS SHEET ARE PREPARED FOR USE ON THIS PROJECT AS INSTRUMENTS OF SERVICE, AND REMAIN THE PROPERTY OF HAMILTON+AITKEN ARCHITECTS, WHICH RETAINS ALL COMMON LAW, STATUTORY AND RESERVED RIGHTS, INCLUDING COPYRIGHT. © HAMILTON+AITKEN ARCHITECTS.

DRAWING TITLE

EXTERIOR ELEVATIONS

SHEET NUMBER

A3.0

CAD FILE: 21160 TTL.vwx

DATE	PROJECT NO.
4/28/2021	2021.160

FOR REVIEW - NOT FOR CONSTRUCTION

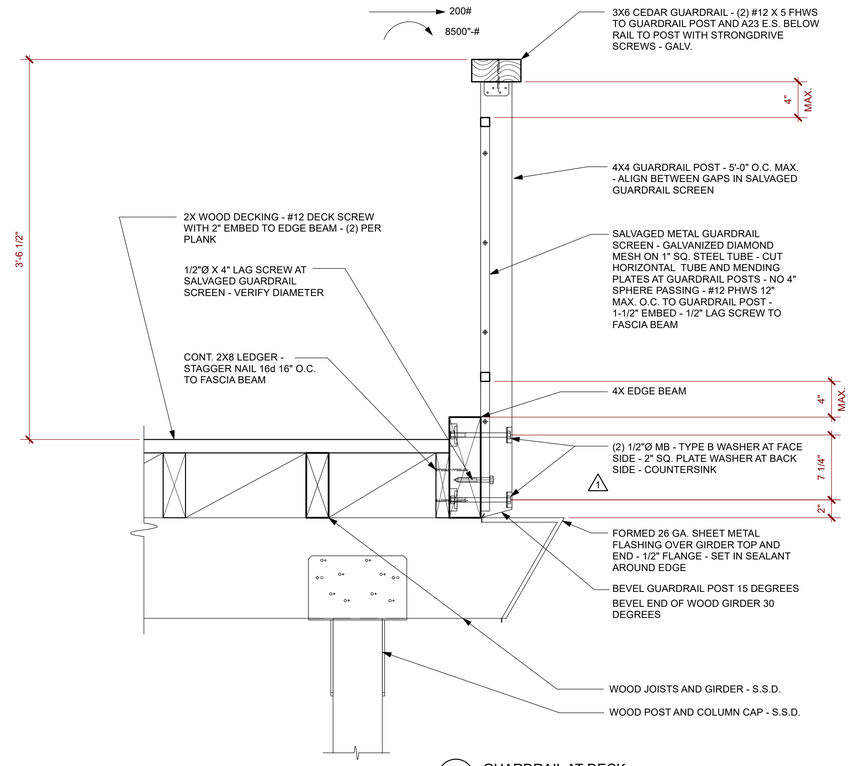

9 GUARDRAIL AT DECK
Scale: 1 1/2" = 1'-0"

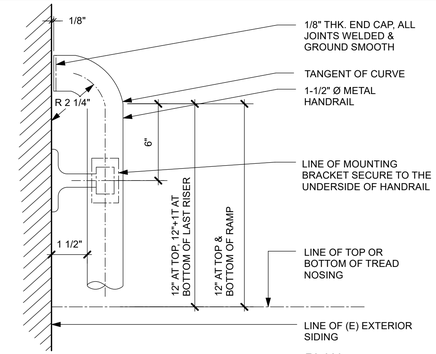

5 HANDRAIL AT WALL RETURN
Scale: 3" = 1'-0"

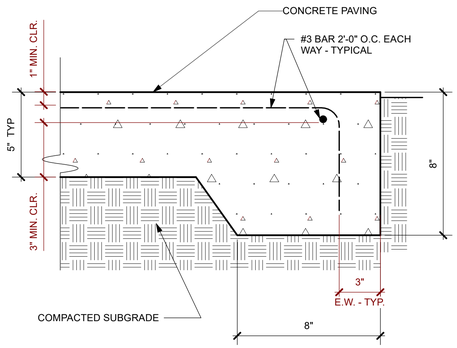

1 TYPICAL CONCRETE PAVING EDGE
Scale: 3" = 1'-0"

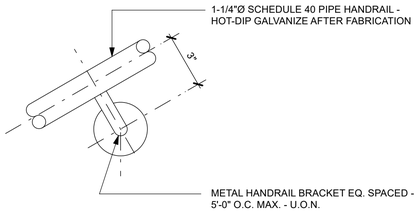

6 HANDRAIL BRACKET ELEVATION
Scale: 1:4

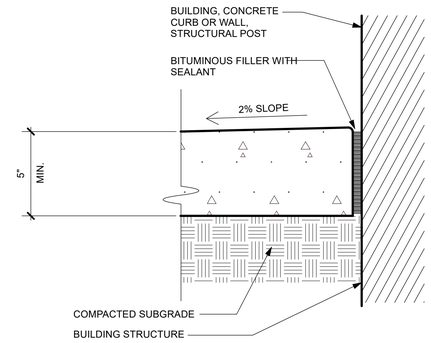

2 CONCRETE PAVING JOINTS @ WALL/POST
Scale: 3" = 1'-0"

KEYNOTES

RESUBMITTAL
11/21/2022
SAN MATEO COUNTY BUILDING INSPECTION

SHEET NOTES

1. ALL EXTERIOR EXPOSED LUMBER DECAY RESISTANT SPECIES OR PRESSURE-TREATED.
2. GALVANIZE ALL EXTERIOR STEEL U.O.N.
3. ALL EXTERIOR FASTENERS TO BE CORROSION RESISTANT. WOOD SCREWS #12 AND SMALLER STAINLESS STEEL U.O.N. BOLTS, SDS SCREWS AND LAG SCREWS LARGER THAN #12 TO BE HOT DIPPED GALVANIZED U.O.N.
4. SEE STRUCTURAL DRAWINGS FOR ADDITIONAL INFORMATION.

JOB COPY
TO REMAIN ON SITE AT ALL TIMES

REVIEWED FOR CODE COMPLIANCE
This review does not authorize violation of State or County building laws.
Jan 26 2023
SAN MATEO CO. BLDG. INSP. DIV.

LEGEND

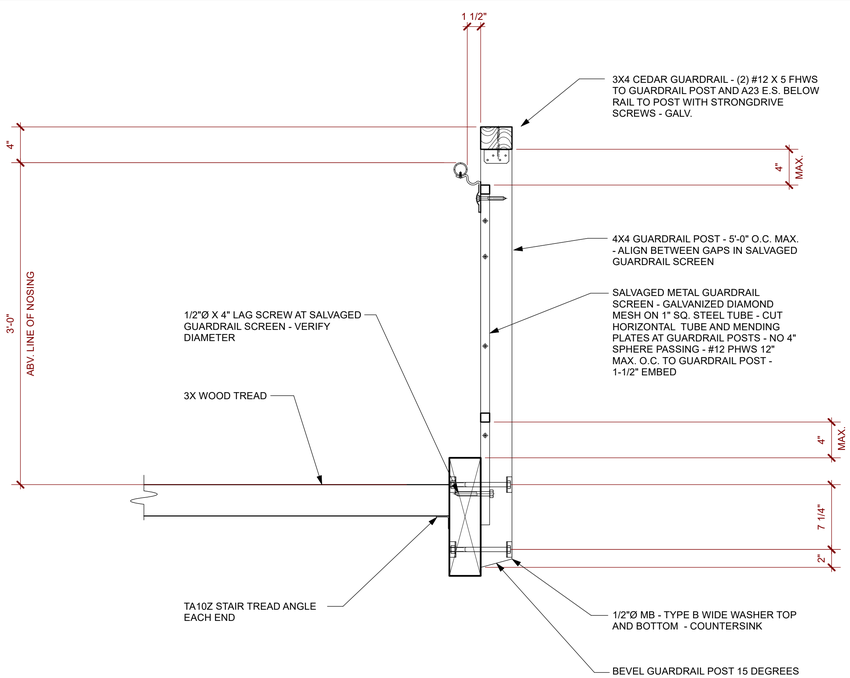

10 GUARDRAIL AT STAIR
Scale: 1 1/2" = 1'-0"

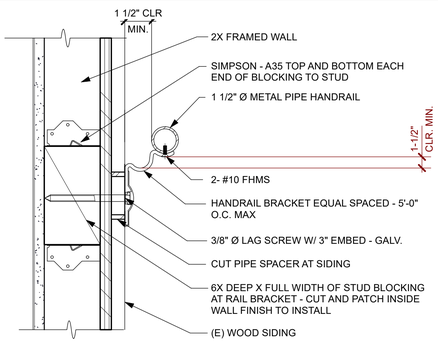

7 HANDRAIL SECTION AT WALL
Scale: 6"=1'-0"

5,6 - FOR INFO

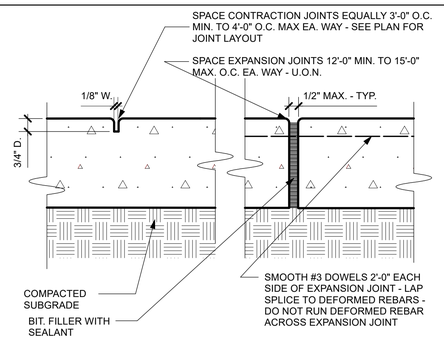

A CONTRACTION JOINT
B EXPANSION JOINT

3 CONCRETE PAVING JOINTS
Scale: 3" = 1'-0"

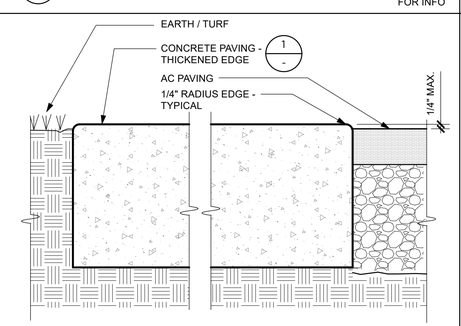

A AT EARTH / TURF
Scale: 3" = 1'-0"

B AT AC PAVING
Scale: 3" = 1'-0"

8 CONCRETE PAVING TRANSITIONS
Scale: 3" = 1'-0"

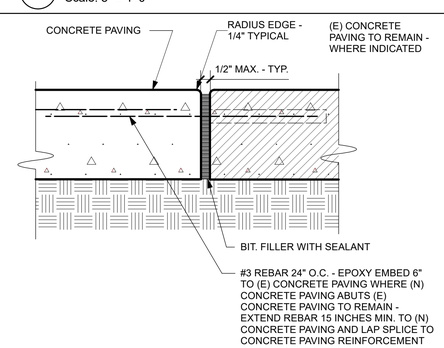

4` (N) CONCRETE PAVING AT (E) CONCRETE PAVING
Scale: 3" = 1'-0"

HIGHLANDS RECREATION DISTRICT

STAIR AND DECK REPAIR
1851 LEXINGTON AVE
SAN MATEO, CA 94402

HIGHLANDS RECREATION DISTRICT
1851 LEXINGTON AVE
SAN MATEO, CA 94402

HAMILTON + AITKEN ARCHITECTS
525 BRANNAN STREET STE 400
SAN FRANCISCO, CA 94107
T: 415 974 5030
www.HAarchs.com

LICENSED ARCHITECT
CHAD HAMILTON
C15932
Ren.12/30/23
STATE OF CALIFORNIA

NO.	ISSUED FOR	DATE
A	DBI REVIEW	4/11/22
B	DBI REVIEW	11/4/22

THE DRAWING, DESIGN AND INFORMATION CONTAINED ON THIS SHEET ARE PREPARED FOR USE ON THIS PROJECT AS INSTRUMENTS OF SERVICE, AND REMAIN THE PROPERTY OF HAMILTON+AITKEN ARCHITECTS, WHICH RETAINS ALL COMMON LAW, STATUTORY AND RESERVED RIGHTS, INCLUDING COPYRIGHT. © HAMILTON+AITKEN ARCHITECTS.

DRAWING TITLE
MISCELLANEOUS DETAILS

SHEET NUMBER
A7.1

CAD FILE: 21160 TTL.vwx

DATE	PROJECT NO.
4/28/2021	2021.160

FOR REVIEW - NOT FOR CONSTRUCTION

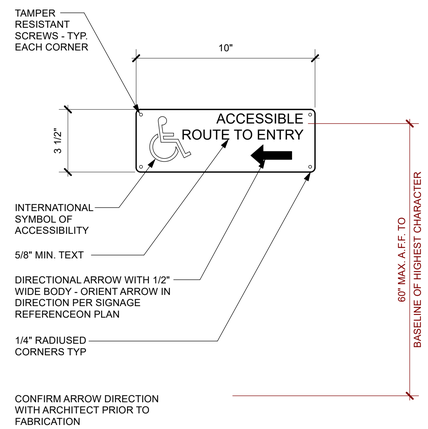

4 DIRECTIONAL ACCESS SIGNAGE
Scale: 3" = 1'-0"

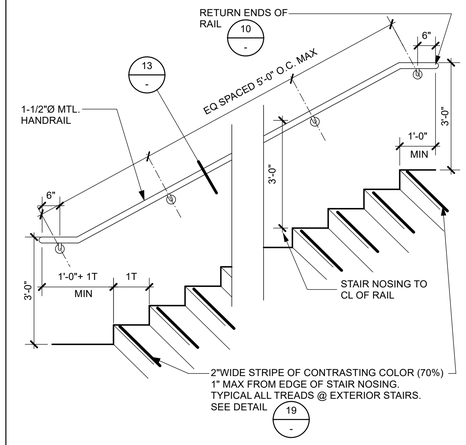

L 1 TYP. EXTERIOR STAIR W/ WALL MOUNT HANDRAIL
Scale: 1/2" = 1'-0"

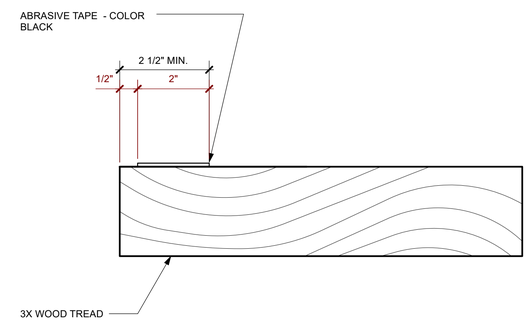

NOTE: FILLER TO BE A MIN.
70% CONTRASTING COLOR

2 NOSING @ EXTERIOR WOOD STAIR
Scale: Half Actual Size

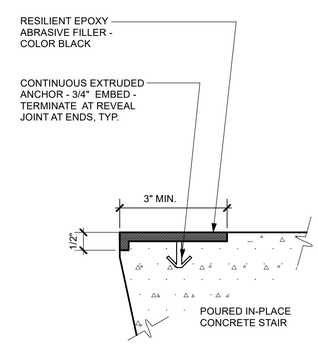

NOTE: FILLER TO BE A MIN.
70% CONTRASTING COLOR

3 NOSING @ EXTERIOR CONCRETE STAIR
Scale: Half Actual Size

KEYNOTES

RESUBMITTAL
11/21/2022
SAN MATEO COUNTY
BUILDING INSPECTION

SHEET NOTES

1. ALL EXTERIOR EXPOSED LUMBER DECAY RESISTANT SPECIES OR PRESSURE-TREATED.
2. GALVANIZE ALL EXTERIOR STEEL U.O.N.
3. ALL EXTERIOR FASTENERS SHALL BE CORROSION RESISTANT. WOOD SCREWS #12 AND SMALLER STAINLESS STEEL U.O.N. BOLTS, SDS SCREWS AND LAG SCREWS LARGER THAN #12 SHALL BE HOT DIPPED GALVANIZED U.O.N.
4. SEE STRUCTURAL DRAWINGS FOR ADDITIONAL INFORMATION.

JOB COPY
TO REMAIN ON
SITE AT ALL TIMES

REVIEWED FOR CODE COMPLIANCE
This review does not authorize violation of State or County building laws.
Jan 26 2023
SAN MATEO CO. BLDG. INSP. DIV.

LEGEND

HIGHLANDS RECREATION DISTRICT

STAIR AND DECK REPAIR
1851 LEXINGTON AVE
SAN MATEO, CA 94402

HIGHLANDS RECREATION DISTRICT
1851 LEXINGTON AVE
SAN MATEO, CA 94402

HAMILTON + AITKEN ARCHITECTS
525 BRANNAN STREET STE 400
SAN FRANCISCO, CA 94107
T. 415 974 5030
www.HAarchs.com

LICENSED ARCHITECT
CHAD HAMILTON
C15932
Ren.12/30/23
STATE OF CALIFORNIA

NO.	ISSUED FOR	DATE
A	DBI REVIEW	4/11/22
B	DBI REVIEW	11/4/22

THE DRAWING, DESIGN AND INFORMATION CONTAINED ON THIS SHEET ARE PREPARED FOR USE ON THIS PROJECT AS INSTRUMENTS OF SERVICE, AND REMAIN THE PROPERTY OF HAMILTON+AITKEN ARCHITECTS, WHICH RETAINS ALL COMMON LAW, STATUTORY AND RESERVED RIGHTS, INCLUDING COPYRIGHT. © HAMILTON+AITKEN ARCHITECTS.

DRAWING TITLE
MISCELLANEOUS DETAILS

SHEET NUMBER
A7.2

CAD FILE: 211[illegible]

DATE	PROJECT NO.
4/28/2021	2021.160

FOR REVIEW - NOT FOR CONSTRUCTION

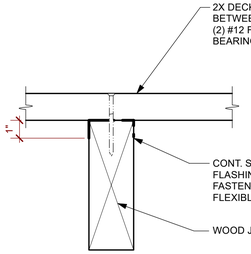

9 DECK PLANK - TYPICAL
Scale: 3" = 1'-0"

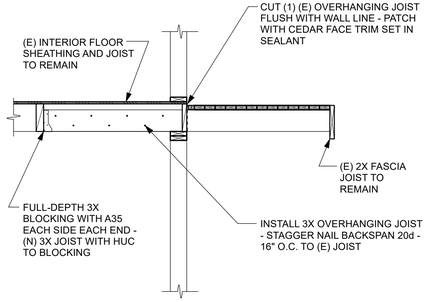

5 OVERHANGING JOIST REINFORCEMENT
Scale: 1/2" = 1'-0"

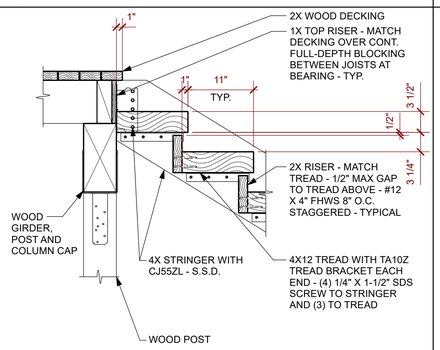

10 STAIR STRINGER - TREAD & RISER
Scale: 1" = 1'-0"

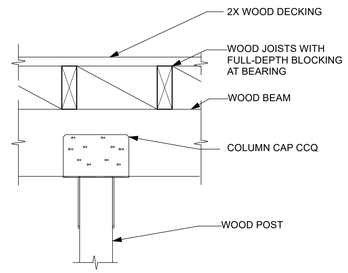

6 WOOD POST CAP AT WOOD BEAM - TYPICAL
Scale: 1" = 1'-0"

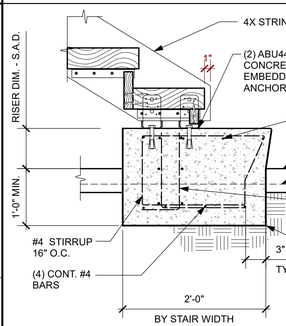

11 CONCRETE POST FOOTING
Scale: 1" = 1'-0"

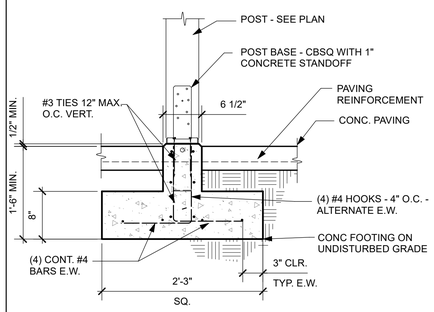

7 CONCRETE POST FOOTING
Scale: 1" = 1'-0"

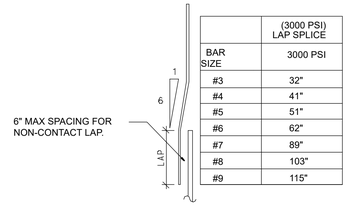

BAR SIZE	(3000 PSI) LAP SPLICE 3000 PSI
#3	32"
#4	41"
#5	51"
#6	62"
#7	89"
#8	103"
#9	115"

NOTES:

1. UNLESS INDICATED OTHERWISE, USE LAP SPLICE LENGTHS PER SCHEDULE.
2. WHERE CLEAR SPACE BETWEEN BARS LAP SPLICED AT ANY SECTION IS LESS THAN 2 BAR DIAMETERS, OR WHERE THE BAR COVER IS LESS THAN OR EQUAL TO THE BAR DIAMETER, INCREASE THE LAP LENGTH BY 50%
3. SPLICES OF HORIZONTAL REINFORCEMENT IN FOOTING STAGGERED
4. TERMINATE ALL BARS W/ 90° STD HOOK.

STANDARD HOOK LENGTHS				
BAR SIZE	MAIN. REINF.		STIRRUP & TIE HOOKS	
	90°	180°	90°	135°
#3	6"	6"	4"	4"
#4	6"	6"	4"	4"
#5	7 1/2"	6"	4"	4"
#6	9"	6"	9"	4 1/2"
#7	10 1/2"	6"	10 1/2"	5 1/4"
#8	12"	6"	12"	6"

DIAMETER OF BENDS	
D1	1 1/2" FOR #3 BARS 2" FOR #4 BARS 2 1/2" FOR #5 BARS
D2	6d FOR #3 THRU #8 BARS 8d FOR #9, #10 & #11 BARS

"D1" - FOR STIRRUPS, TIES AND WALL REINF. AT OPENINGS
"D2" - FOR ALL OTHERS
d - NOMINAL BAR DIAMETER

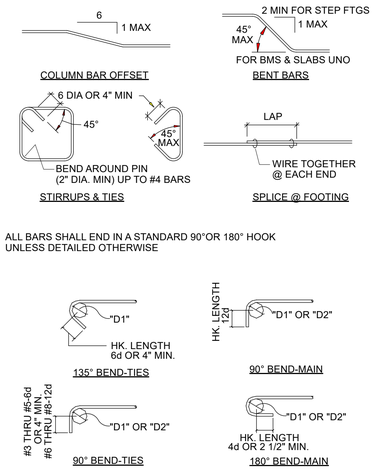

1 TYPICAL REINFORCING DETAILS
Scale: NTS

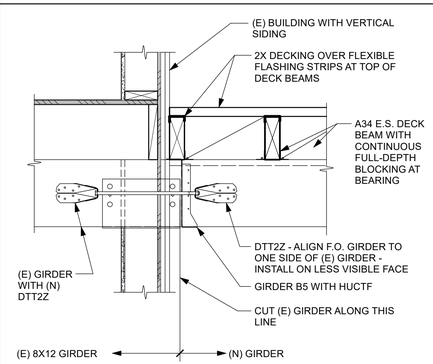

12 GIRDER TIE AT (E) BUILDING - TYPICAL
Scale: 1" = 1'-0"

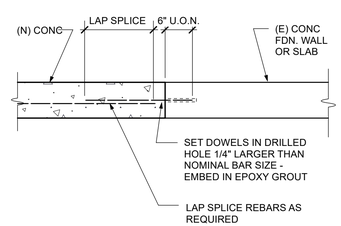

2 EPOXY DOWEL EMBEDMENT - TYPICAL
Scale: 3/4" = 1'-0"

05500 - METAL FABRICATIONS
A. STEEL - ASTM A36, UNLESS OTHERWISE NOTED.
B. EXPANSION BOLTS - HILTI SLEEVE ANCHORS, CARBON STEEL WITH HEX HEAD
C. PULL TEST 10% OF EXPANSION BOLTS TO 2-1/2 X ALLOWABLE TENSION VALUE, UNLESS OTHERWISE NOTED.

06100 - ROUGH CARPENTRY
A. FOR SCHEDULE OF MINIMUM NAILING SEE TABLE 2301.10.1 CALIFORNIA BUILDING CODE. 16 PENNY VINYL COATED SINKERS MAY BE SUBSTITUTED FOR 16 PENNY BOX OR COMMON NAILS FOR ROUGH FRAMING. SINKERS SHALL NOT BE USED WITH METAL CONNECTORS.
B. WALL SILLS ON CONCRETE SHALL BE PRESSURE PRESERVATIVE TREATED DOUGLAS FIR. SILLS SHALL BE FASTENED TO THE CONCRETE WITH A MINIMUM OF TWO FASTENERS PER PIECE AND NO FASTENERS FURTHER THAN 9 INCHES FROM END OF PIECE.
C. PLACE JOISTS WITH CROWN UP.
D. RETIGHTEN ALL BOLTS PRIOR TO CLOSING IN WALLS.
E. USE GALVANIZED NAILS, BOLTS, AND HARDWARE WHERE EXPOSED TO WEATHER.
F. DOUBLE ALL JOISTS UNDER ALL PARALLEL PARTITIONS, UNLESS NOTED OTHERWISE.
G. BLOCK ALL JOISTS AT SUPPORTS AND UNDER ALL PARTITIONS WITH MINIMUM 2X SOLID BLOCKING. BLOCK AND BRIDGE ROOF JOISTS AT 10 FEET O.C. AND FLOOR JOISTS AT 8 FEET O.C. UNLESS OTHERWISE NOTED.
H. SECURE FRAMED CONNECTIONS NOT OTHERWISE RESTRAINED BY BLOCKING AND DIRECT BEARING WITH METAL FRAMING DEVICES.
I. ALL TIMBER FASTENERS NOT SPECIFICALLY DETAILED ON THE DRAWINGS SHALL BE SIMPSON COMPANY'S STANDARD FASTENERS OR APPROVED EQUAL.
J. PROVIDE MALLEABLE IRON WASHERS FOR ALL BOLTS IN BEARING CONTACT WITH WOOD.

06110 - FRAMING LUMBER (UNLESS OTHERWISE NOTED)
A. ALL FRAMING LUMBER SHALL BE GRADED PER WCLIB GRADING RULES NO. 16.
B. ALL POSTS AND BEAMS SHALL BE DOUGLAS FIR, #1, UNLESS NOTED OTHERWISE.
C. ALL ROOF JOISTS SHALL BE DOUGLAS FIR, #1.
D. ALL FLOOR JOISTS SHALL BE DOUGLAS FIR, #1, KILN DRIED.
E. ALL STUDS, PLATES, ETC., SHALL BE DOUGLAS FIR, #2.
F. ALL LUMBER EXPOSED TO WEATHERING SHALL BE PRESSURE PRESERVATIVE TREATED OR APPROVED ROT-RESISTANT SPECIES.
G. ALL LUMBER PLACED AGAINST BRICK OR CONCRETE SHALL BE PRESSURE PRESERVATIVE TREATED. ALL FASTENERS FOR PRESSURE PRESERVATIVE TREATED WOOD SHALL BE G185 HOT-DIPPED GALVANIZED OR STAINLESS STEEL NAILS.

03200 - REINFORCING STEEL
A. ALL REINFORCING STEEL BARS SHALL CONFORM WITH THE STANDARD SPECIFICATIONS FOR DEFORMED BILLET-STEEL FOR CONCRETE REINFORCEMENT, ASTM DESIGNATION A615-68, AND SHALL BE GRADE 60.
B. WIRE MESH SHALL CONFORM WITH ASTM A185-64.
C. SUITABLE DEVICES OF SOME STANDARD MANUFACTURE SHALL BE USED TO HOLD REINFORCEMENT IN ITS TRUE HORIZONTAL AND VERTICAL POSITIONS. THESE DEVICES SHALL BE SUFFICIENTLY RIGID AND NUMEROUS TO PREVENT DISPLACEMENT OF THE REINFORCING DURING PLACING OF CONCRETE.
D. LAP SPLICE ALL BARS A MINIMUM OF 40 BAR DIAMETERS, UNLESS OTHERWISE NOTED.
E. UNLESS OTHERWISE NOTED, MAINTAIN COVERAGE TO FACE OF BARS AS FOLLOWS:
1. 3 INCHES WHERE CONCRETE IS DEPOSITED AGAINST EARTH EXCEPT SLAB-ON-GRADE.
2. 2 INCHES WHERE CONCRETE IS EXPOSED TO EARTH BUT FORMED.
3. 1-1/2 INCHES FOR BEAMS, COLUMNS AND EXTERIOR SURFACES.
4. 3/4 INCH FOR INTERIOR SLABS, JOISTS AND WALLS.

03300 - CONCRETE
A. REINFORCE ALL CONCRETE. INSTALL ALL INSERTS, BOLTS, ANCHORS, AND REINFORCING AND SECURELY TIE PRIOR TO PLACING CONCRETE.
B. STRUCTURAL CONCRETE SHALL BE HARDROCK CONCRETE AND SHALL ATTAIN AN ULTIMATE COMPRESSIVE STRENGTH OF 3000 PSI AT 28 DAYS.
1. MAXIMUM AGGREGATE SIZE: 3/4 INCH.
2. MAXIMUM SLUMP: FOUR INCHES
C. CONCRETE SHALL BE CONTINUOUSLY CURED FOR 10 DAYS AFTER PLACING IN ANY APPROVED MANNER, INCLUDING CURING COMPOUND, CURING PAPER, ETC. NOTE: FOOTINGS ARE EXCEPTED FROM THIS REQUIREMENT.

03900 - ROD & REBAR EPOXY ADHESIVE
A. FOLLOW ADHESIVE MANUFACTURER'S PRINTED INSTRUCTIONS FOR INSTALLATION OF ROD AND REBAR WITH EPOXY ADHESIVE.
B. VERIFY THE STRENGTH AND QUALITY OF EXISTING CONCRETE TO RECEIVE EMBEDDED RODS AND REBAR. IF NECESSARY, PERFORM PULL TESTS OF TEST RODS PRIOR TO PLACING ACTUAL RODS IN CONCRETE, TO VERIFY THE CAPACITY OF THE EXISTING CONCRETE TO WITHSTAND DESIGN LOADS.
C. EPOXY ADHESIVE FOR ANCHORING BOLTS, RODS AND REINFORCING BARS SHALL BE AS 'HIT-HY 200 ADHESIVE SYSTEM' AS MANUFACTURED BY HILTI, INC. OR AN APPROVED EQUIVALENT. DESIGN LOADS FOR EMBEDDED ITEMS HAVE BEEN CALCULATED USING VALUES PROVIDED BY HILTI, INC. AND USE OF OTHER PRODUCTS MAY NOT RESULT IN EQUIVALENT PERFORMANCE.
D. DRILL ALL HOLES WITH ROTARY HAMMER TO DEPTHS CALLED ON PLANS.
E. BRUSH ALL HOLES WITH CIRCULAR WIRE BRUSH ATTACHED TO A ROTARY DRILL AND BLOW OUT WITH OIL-FREE COMPRESSED AIR.
F. PER INSPECTION REQUIREMENTS, CALL FOR SPECIAL INSPECTION OF ALL HOLES FOR EMBEDDED BOLTS PRIOR TO PLACING ADHESIVE OR BOLT.
G. PLACE A MEASURED AMOUNT OF ADHESIVE INTO THE HOLE, INSERT THE BAR, DISPLACING THE ADHESIVE, THEN SECURE THE BAR IN THE CENTER OF THE HOLE. REMOVE EXCESS EPOXY FROM AROUND THE HOLE BEFORE IT HARDENS.
H. FOR ANCHOR BOLTS RESISTING TENSION FORCES, TEST FIVE PERCENT BUT NOT LESS THAN TWO ANCHORS BY DIRECT TENSION TEST, TO THE FORCES INDICATED. TEST AN ADDITIONAL TWENTY PERCENT OF ALL ANCHOR BOLTS RESISTING TENSION FORCES, BUT NOT LESS THAN THREE BOLTS, BY EITHER TENSION TEST OR TORQUE TEST. NOTIFY ARCHITECT OF ANY FAILURES IN ORDER TO INCREASE THE FREQUENCY OF THE TESTING. THE ARCHITECT SHALL INDICATE WHICH BOLTS ARE TO BE TESTED.
H. FOR ANCHOR BOLTS RESISTING SHEAR FORCES ONLY, TEST TEN PERCENT BUT NOT LESS THAN TWO, TO THE FORCES INDICATED. TEST MAY BE BY DIRECT TENSION OR TORQUE METHOD. NOTIFY ARCHITECT OF ANY FAILURES IN ORDER TO INCREASE THE FREQUENCY OF THE TESTING.

STRUCTURAL NOTES

01000 - GENERAL
A. THESE NOTES APPLY TO ALL DRAWINGS AND GOVERN UNLESS OTHERWISE NOTED OR SPECIFIED.

B. SEE RELEVANT SPECIFICATION SECTIONS FOR ADDITIONAL INFORMATION.
C. VERIFY ALL EXISTING CONDITIONS AND PROPOSED DIMENSIONS AT JOB SITE. COMPARE STRUCTURAL DRAWINGS WITH ARCHITECTURAL, MECHANICAL AND ELECTRICAL DRAWINGS BEFORE COMMENCING WORK. NOTIFY ARCHITECT OF ANY DISCREPANCIES AND DO NOT PROCEED WITH AFFECTED WORK UNTIL THEY ARE RESOLVED. DO NOT SCALE DRAWINGS.
D. UNLESS OTHERWISE SHOWN OR NOTED, ALL TYPICAL DETAILS SHALL BE USED WHERE APPLICABLE.
E. ALL DETAILS SHALL BE CONSIDERED TYPICAL AT SIMILAR CONDITIONS.
F. SAFETY MEASURES: AT ALL TIMES THE CONTRACTOR SHALL BE SOLELY AND COMPLETELY RESPONSIBLE FOR THE CONDITIONS OF THE JOB SITE INCLUDING SAFETY OF THE PERSONS AND PROPERTY, AND FOR ALL NECESSARY INDEPENDENT ENGINEERING REVIEWS OF THESE CONDITIONS. THE ARCHITECT'S OR ENGINEER'S JOB SITE REVIEW IS NOT INTENDED TO INCLUDE REVIEW OF THE ADEQUACY OF THE CONTRACTOR'S SAFETY MEASURES.

01400 - TESTS & INSPECTIONS
A. PROVIDE TESTS AND INSPECTIONS FOR ALL ITEMS AS REQUIRED BY THE 2019 CALIFORNIA BUILDING CODE.
B. CALL THE ARCHITECT FOR STRUCTURAL OBSERVATION OF THE FOLLOWING ITEMS:
1. FOUNDATION TRENCHES WITH REINFORCING STEEL - PRIOR TO PLACING CONCRETE.
2. STRUCTURAL FRAMING PRIOR TO COVERING.
3. OTHER ITEMS AS NOTED OR AS REQUIRED BY CBC.
C. THE FOLLOWING ITEMS ARE EXEMPT FROM SPECIAL INSPECTION PER CBC1705.3 EXCEPTION 1, BUT SHALL BE REVIEWED BY THE ARCHITECT:
1. CONCRETE - INSPECT TRENCHES PRIOR TO PLACING CONCRETE.
2. REINFORCING STEEL - INSPECT REINFORCING STEEL PLACEMENT PRIOR TO PLACING CONCRETE.
3. BOLTS INSTALLED IN EXISTING MASONRY OR CONCRETE
A. EPOXY EMBEDDED RODS AND ANCHOR BOLTS - INSPECT PRIOR TO COVERING OR CLOSING IN.
B. EXPANSION BOLTS - INSPECT PRIOR TO COVERING OR CLOSING IN.
D. THE CONTRACTOR SHALL PROVIDE NOTICE A MINIMUM OF 48 HOURS PRIOR TO TIME OF INSPECTION.

02300 - SELECT FILL AND SITE PREPARATION
A. STRIP THE AREA TO BE BUILT OVER OF ALL ORGANIC MATERIAL AND TOP SOIL.
B. SCARIFY THE TOP 6 INCHES OF THE STRIPPED SURFACE; BRING TO THE CORRECT MOISTURE CONTENT; THEN RECOMPACT TO AT LEAST 95% UNDER FOOTINGS AND 90% ELSEWHERE.
C. APPLY AN APPROVED TERMITICIDE TREATMENT TO SOIL PRIOR TO INSTALLING CONCRETE SLABS ON GRADE

03001 - FOUNDATIONS
A. ASSUMED ALLOWABLE SOIL PRESSURES FOR DEAD PLUS LIVE LOADS: 1500 PSF
B. EXCEPT WHERE OTHERWISE SHOWN, EXCAVATIONS SHALL BE MADE AS NEAR AS POSSIBLE TO THE NEAT LINES REQUIRED BY THE SIZE AND SHAPE OF THE STRUCTURE. ALL FOUNDATIONS SHALL BE POURED WITHOUT THE USE OF SIDE FORMS WHEREVER POSSIBLE. IF THE TRENCHES CANNOT STAND, FULLY FORM SIDES TO DIMENSIONS SHOWN.
C. DO NOT ALLOW WATER TO STAND IN TRENCHES. IF BOTTOMS OF TRENCHES BECOME SOFTENED DUE TO RAIN OR OTHER WATER BEFORE CONCRETE IS CAST, EXCAWATE SOFTENED MATERIAL AND REPLACE WITH PROPERLY COMPACTED BACKFILL OR CONCRETE AT NO COST TO OWNER.
D. ALL EXCAVATIONS, FORMS AND REINFORCING ARE TO BE INSPECTED BY THE LOCAL BUILDING INSPECTOR AND ARCHITECT PRIOR TO PLACING CONCRETE..

STRUCTURAL CRITERIA

1

DESIGN PER CBC 2019

WIND DESIGN CRITERIA

BASIC WIND SPEED: **92** MPH
PER WIND MAP, ASCE 7-16 FIGURE 26.5-1A

BUILDING CLASSIFICATION: **II**
PER ASCE 7-16 TABLE 1.5-1
OCCUPANCY CATEGORY

EXPOSURE FACTOR: **B**
PER ASCE 7-10 SEC. 26.7.3

SEISMIC DESIGN CRITERIA

LATITUDE: **37.5200116**
LONGITUDE: **-122.3464768**

MAPPED DATA - USGS GROUND MOTION PARAMETER
Ss: 2.413 **G**
S1: 1.011 **G**

SITE CLASS: **D**

R = **6.5**

RESUBMITTAL

11/21/2022

SAN MATEO COUNTY BUILDING INSPECTION

1

JOB COPY TO REMAIN ON SITE AT ALL TIMES

REVIEWED FOR CODE COMPLIANCE
This review does not authorize violation of State or County building laws.

Jan 26 2023

SAN MATEO CO. BLDG. INSP. DIV.

NAILING SCHEDULE

FOR CONNECTIONS NOT INDICATED, COMPLY WITH CBC TABLE 2304.10.1	
CONNECTION	NAILING
JOIST TO SILL OR GIRDER, TOENAIL	(3) - 8d
BRIDGING TO JOIST, TOENAIL EACH END	(2) - 8d
SOLE PLATE TO JOIST OR BLOCKING, FACE NAIL	16d AT 16" O.C.
TOP PLATE TO STUD, END NAIL	(2) - 16d
STUD TO SOLE PLATE	(4) - 10d TOENAIL OR (2) - 16d ENDNAIL
DOUBLE STUDS, FACE NAIL	16d AT 24" O.C.
DOUBLED TOP PLATES, FACE NAIL	16d AT 16" O.C.
TOP PLATES - LAPS AT WALL INTERSECTIONS	(2) - 16d
TOP PLATES - SPLICES	(8) 16d
CONTINUOUS HEADER, TWO PIECES	16d AT 16" O.C. ALONG EACH EDGE
CEILING JOISTS TO PLATE, TOENAIL	(3) - 8d
CONTINUOUS HEADER TO STUD, TOENAIL	(3) - 8d
CEILING JOISTS, LAPS OVER PARTITIONS, FACE NAIL	(3) - 16d
CEILING JOISTS TO PARALLEL RAFTERS, FACE NAIL	(3) - 16d
RAFTER TO PLATE, TOENAIL	(3) - 8d
BUILT UP CORNER STUDS	16d AT 24" O.C.
PLYWOOD SUBFLOOR, ROOF AND WALL SHEATHING	
SHEAR WALLS	SEE SHEAR WALL SCHEDULE
1/2" AND LESS	8d
19/32" to 3/4"	10d
7/8" to 1"	10d
1 1/8"	12d

ALL NAILS TO BE COMMON WIRE NAILS. NAILING SCHEDULE APPLIES U.O.N. - SEE DETAILS. COMPLY WITH CBC TABLE 2304.10.1

MINIMUM COVER FOR REINFORCEMENT

SURFACES PLACED AGAINST EARTH	3"
FORMED SURFACES BELOW GRADE	2"
SURFACES EXPOSED TO WEATHER - #5 & SMALLER	1 1/2"
EXTERIOR WALL AT EXTERIOR FACE	1 1/2"
SLABS AND WALLS NOT EXPOSED TO WEATHER	3/4"

HIGHLANDS RECREATION DISTRICT

STAIR AND DECK REPAIR
1851 LEXINGTON AVE
SAN MATEO, CA 94402

HIGHLANDS RECREATION DISTRICT

1851 LEXINGTON AVE
SAN MATEO, CA 94402

HAMILTON + AITKEN ARCHITECTS
525 BRANNAN STREET STE 400
SAN FRANCISCO, CA 94107
T: 415 974 5030
www.HAarchs.com

LICENSED ARCHITECT
CHAD HAMILTON
C15932
Ren.12/30/23
STATE OF CALIFORNIA

NO.	ISSUED FOR	DATE
A	DBI REVIEW	4/11/22
B	DBI REVIEW	11/4/22

THE DRAWING, DESIGN AND INFORMATION CONTAINED ON THIS SHEET ARE PREPARED FOR USE ON THIS PROJECT AS INSTRUMENTS OF SERVICE, AND REMAIN THE PROPERTY OF HAMILTON+AITKEN ARCHITECTS, WHICH RETAINS ALL COMMON LAW, STATUTORY AND RESERVED RIGHTS, INCLUDING COPYRIGHT. © HAMILTON+AITKEN ARCHITECTS.

DRAWING TITLE
STRUCTURAL NOTES & DETAILS

SHEET NUMBER
S1.0

CAD FILE: 21160 TTL.vwx

DATE	PROJECT NO.
4/28/2021	2021.160

FOR REVIEW - NOT FOR CONSTRUCTION

POST & BEAM SCHEDULE

POST / BEAM NUMBER	MATERIAL	SIZE	REMARKS
B1	P.T. WOOD	3 X 8	
B1.5	P.T. WOOD	4 X 12	
B2	P.T. WOOD	3 X 8	
B3	P.T. WOOD	3 X 8	
B4	P.T. WOOD	4 x 12	STAIR STRINGER
B5	P.T. WOOD	6 X 12	
P1	P.T. WOOD	6 X 6	

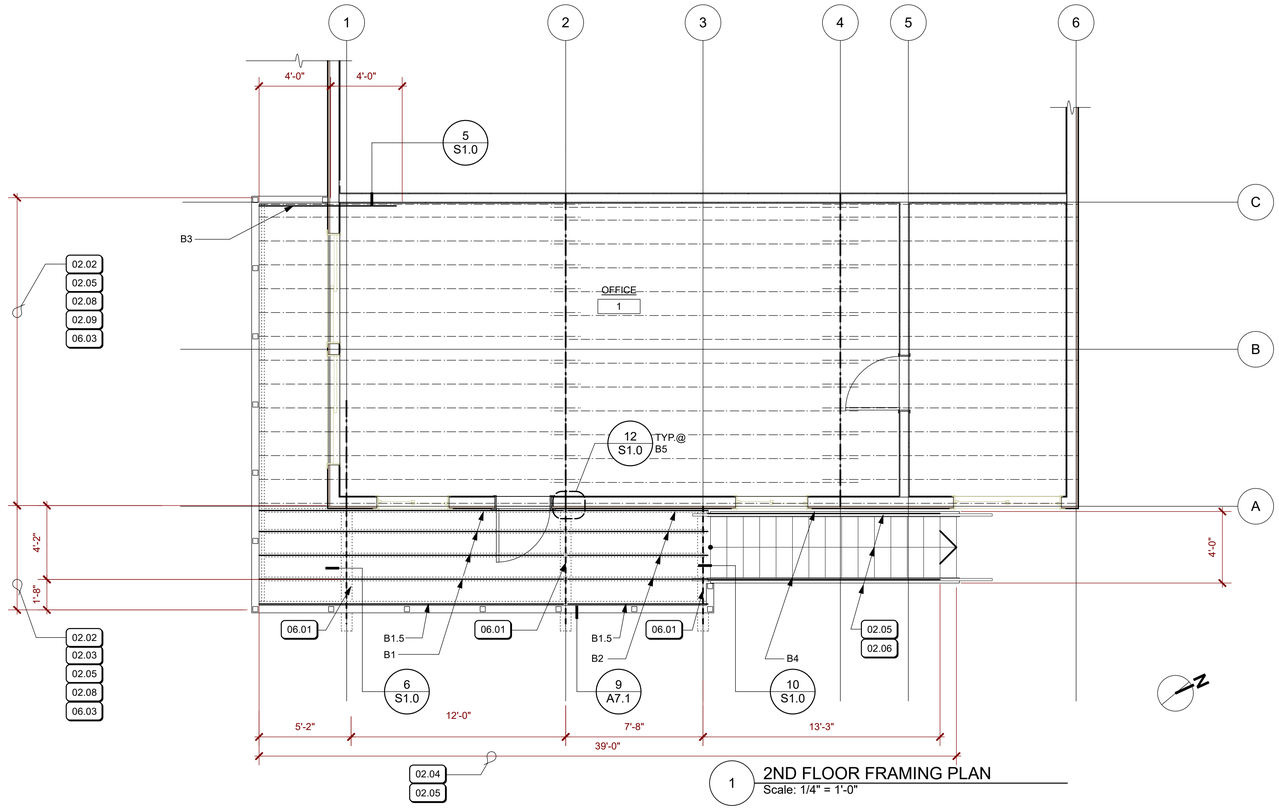

1 2ND FLOOR FRAMING PLAN
Scale: 1/4" = 1'-0"

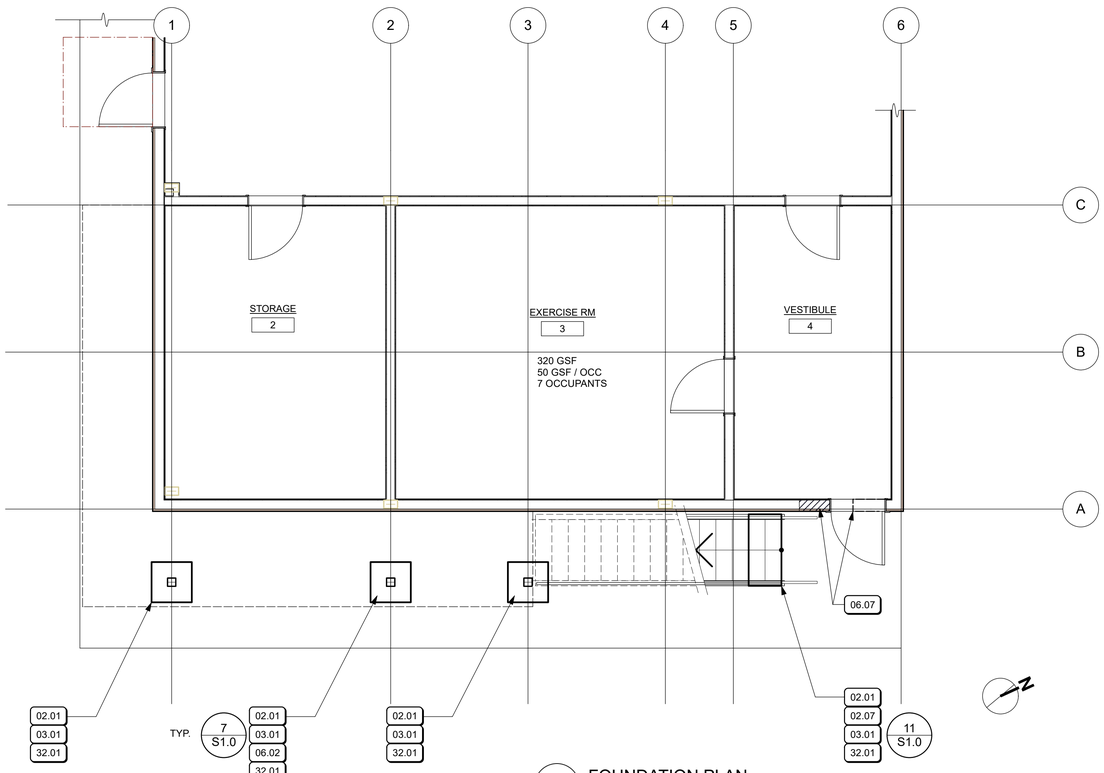

2 FOUNDATION PLAN
Scale: 1/4" = 1'-0"

KEYNOTES

REF	KEY	NOTE
	02.01	SAWCUT AND DEMO PART OF (E) CONCRETE PAVING FOR (N) CONCRETE FOOTING - CUT OUT CONCRETE PAVING ALONG (E) JOINT LINES
	02.02	DEMO (E) 2X WOOD DECKING
	02.03	DEMO (E) 2X8 WOOD JOISTS
	02.04	DEMO (E) 2X WOOD FASCIA
	02.05	DEMO (E) WOOD GUARDRAIL - SALVAGE (E) METAL GUARDRAIL SCREEN
	02.06	DEMO (E) WOOD STAIR AND STRINGERS
	02.07	DEMO (E) CONCRETE STAIR FOOTING
	02.08	(E) 2X WOOD FASCIA TO REMAIN
	02.09	(E) 2X WOOD JOISTS TO REMAIN
	03.01	CONCRETE FOOTING
	06.01	CUT AND DEMO (E) 6X8 WOOD BEAM WITH 2X SPLICE PLATES EACH SIDE - INSTALL (N) BEAM B5
	06.02	WOOD POST - S.S.D.
9/S1.0	06.03	CONTINUOUS 2X4 CEDAR DECKING - 1/8" SPACE BETWEEN PLANKS - INSTALL OVER SELF-ADHESIVE FLEXIBLE FLASHING
	06.07	REMOVE (E) DOOR HEADER - INFILL DOOR OPENING AND REMOVE (E) STUDS TO RELOCATE DOOR AS SHOWN - 6X DEPTH DOOR HEADER WITH (1) 2X TRIMMER EACH END
	32.01	PATCH CONCRETE PAVING - FINISH TO MATCH (E) CONCRETE PAVING

RESUBMITTAL
11/21/2022
SAN MATEO COUNTY
BUILDING INSPECTION

SHEET NOTES

1. ALL EXTERIOR EXPOSED LUMBER DECAY RESISTANT SPECIES OR PRESSURE TREATED.

2. GALVANIZE ALL EXTERIOR STEEL U.O.N.

3. ALL EXTERIOR FASTENERS SHALL BE CORROSION RESISTANT. WOOD SCREWS #12 AND SMALLER STAINLESS STEEL U.O.N. BOLTS, SDS SCREWS AND LAG SCREWS LARGER THAN #12 SHALL BE HOT DIP GALVANIZED U.O.N.

4. SEE STRUCTURAL DRAWINGS FOR ADDITIONAL INFORMATION.

JOB COPY
TO REMAIN ON
SITE AT ALL TIMES

REVIEWED FOR CODE COMPLIANCE
This review does not authorize violation
of State or County building laws.

Jan 26 2023

SAN MATEO CO. BLDG. INSP. DIV.

LEGEND

HIGHLANDS RECREATION DISTRICT

STAIR AND DECK REPAIR
1851 LEXINGTON AVE
SAN MATEO, CA 94402

HIGHLANDS RECREATION DISTRICT

1851 LEXINGTON AVE
SAN MATEO, CA 94402

HAMILTON + AITKEN ARCHITECTS
525 BRANNAN STREET STE 400
SAN FRANCISCO, CA 94107
T: 415 974 5030
www.HAarchs.com

LICENSED ARCHITECT
CHAD HAMILTON
C15932
Ren.12/30/23
STATE OF CALIFORNIA

NO.	ISSUED FOR	DATE
A	DBI REVIEW	4/11/22
B	DBI REVIEW	11/4/22

THE DRAWING, DESIGN AND INFORMATION CONTAINED ON THIS SHEET ARE PREPARED FOR USE ON THIS PROJECT AS INSTRUMENTS OF SERVICE, AND REMAIN THE PROPERTY OF HAMILTON+AITKEN ARCHITECTS, WHICH RETAINS ALL COMMON LAW, STATUTORY AND RESERVED RIGHTS, INCLUDING COPYRIGHT. © HAMILTON+AITKEN ARCHITECTS.

DRAWING TITLE
FRAMING & FOUNDATION PLAN

SHEET NUMBER
S2.1

CAD FILE: 21160 TTL.vwx

DATE	PROJECT NO.
4/28/2021	2021.160

FOR REVIEW - NOT FOR CONSTRUCTION